detailed information on nursing books, visit our website www.ejaypee.com, for detailed information on nursing books, visit our website www.ejaypee.com,

# Nursing Informatics & Technology

## (Computer for Nurses)

*As per the Revised Syllabus for BSc Nursing*

**Semester-II**


PEOPLE


INFORMATION


TECHNOLOGY


BETTER CARE

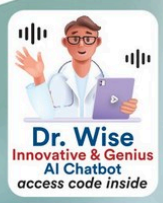


**2nd Edition**



**Dipak Sethi**
**Sukhbir Kaur**

*Foreword*
**Suresh Sharma**

JAYPEE

JAYPEE BROTHERS

# Contents


1. **Introduction of Computer Application for Patient Care Delivery System and Nursing Practice** ..... 1
   - ❖ Terminologies *1*
   - ❖ Computer *2*
   - ❖ Application Software *3*
   - ❖ Use of Computer in Teaching and Learning *3*
   - ❖ Use of Computer in Research *5*
   - ❖ Use of Computer in Nursing Practice *5*
   - ❖ AI in Healthcare System *6*
   - ❖ Use of Computer in Literature Search and Database *7*
   - ❖ Computer Databases *8*
   - ❖ Statistical Packages *9*
   - ❖ Types of Statistical Packages *10*
   - ❖ Research Data Base *19*
   - ❖ Data Storage and Organization *23*
   - ❖ Introduction to Microsoft Word *29*
   - ❖ Microsoft Excel *37*
   - ❖ Excel Worksheet *37*
   - ❖ Selecting Cells and Ranges *38*
   - ❖ Excel Features *39*
   - ❖ Microsoft Powerpoint *39*
   - ❖ Internet *41*
2. **Principles of Health Informatics** ..... 47
   - ❖ Terminologies *47*
   - ❖ Introduction *47*
   - ❖ Health Informatics *48*
   - ❖ Need of Health Informatics *48*
   - ❖ Elements of Health Informatics *48*
   - ❖ Applications of Nursing Informatics *49*
   - ❖ Theories of Nursing Informatics *50*
   - ❖ Use of Data, Information and Knowledge in Healthcare Practice *54*
   - ❖ Principles of Health Informatics *55*
   - ❖ Benefits of Health Informatics Systems in Hospitals *56*
   - ❖ Definiton of Nursing Informatics *58*
   - ❖ Strategies to Increase Coordination and Communication in Health Informatics *58*
   - ❖ Limitations of Nursing Informatics *61*
   - ❖ Use of Data and Knowledge for Effective Health Service Communication *62*
   - ❖ Applied Examples of Knowledge and Information in Health Care *64*
3. **Information System in Healthcare** ..... 68
   - ❖ Terminologies *68*
   - ❖ Role and Architecture of Information Systems *69*


JAYPEE BROTHERS

- Architecture of Information Systems *71*
- Hospital Information System *80*
- AIMS of Hospital Information System *82*
- Who Benefits From Hospital Information System? *83*
- Subsystems of HIS *84*
- Information System for Patient Care *87*
- Clinical Information System *88*
- Systems for Clinical Support *89*
- Integration of the Components Patient Care Information System *90*
- Role of Patient Administration/Management System (PMS) *90*
- Components of Managerial Information System *91*

**4. Shared Care and Electronic Health Records ..... 99**
- Terminologies *99*
- Introduction *99*
- Electronic Health Records *100*
- Electronic Health Records (EHR): Purposes *102*
- Components of Electronic Health Records (EHR) *104*
- Technologies in Electronic Health Records (EHR) *106*
- How to Implement a Successful Electronic Health Record (EHR) System *109*
- Implementation of an Electronic Health Record (EHR) *111*
- Challenges Related to Electronic Health Records Implementation *112*
- How to Implement Successful Electronic Health Record System? *113*
- Goals of Electronic Health Records Standards *114*
- Latest Trends in Electronic Record Technology *114*
- Latest Trends in Electronic Health Records (EHR) *116*
- Benefits of Electronic Medical Records *119*
- Standard for Electronic Health Records *119*

**5. Patient Safety and Clinical Risk ..... 124**
- Terminologies *124*
- Patient Safety and Informatics *124*
- Methods Used In Hospital Information System for Patient Safety *125*
- Common Sources of Errors in Patient Care *126*
- Causes of Patient Harm *130*
- Different Areas of Patient Safety in Hospitals *134*
- Information Technology with the Greatest Impact on Patient Safety *138*
- Future of Information Technology and Patient Safety *139*
- Risk Management Process *139*
- Importance of Risk Management in Healthcare *140*
- Steps in Risk Management Process *140*
- Applications of Risk Management Process *143*
- American Society for Health Care Risk Management (ASHRM) *145*

**6. Clinical Knowledge and Decision Making ..... 152**
- Terminologies *152*
- Introduction *152*
- Knowledge Management System *153*


JAYPEE BROTHERS

- ❖ Knowledge Management Methods *157*
- ❖ Health Informatics Standards *158*
- ❖ Systematized Nomenclature of Medicine, Clinical Terms (SNOMED CT) *160*
- ❖ SNOMED CT To ICD-10-CM Map *160*

**7. E-Health: Patient and Internet ..... 165**
- ❖ Terminologies *165*
- ❖ Introduction *165*
- ❖ E-Health System *166*
- ❖ Use of Information and Communication Technology to Improve Healthcare (E-Health Applications) *167*
- ❖ Challenges in Adopting E-Health *168*
- ❖ Public Health Informatics *169*

**8. Using Information in Healthcare Management ..... 173**
- ❖ Terminologies *173*
- ❖ Nursing Information Systems *173*
- ❖ Evaluation, Analysis and Presentation of Healthcare Data to Inform Decisions *183*
- ❖ Types of Data Analytics *184*
- ❖ Data Management *185*
- ❖ Data Management Process *186*
- ❖ Data Analysis *189*
- ❖ Data Interpretation *191*
- ❖ Healthcare Data in Decision Making *192*
- ❖ Various Approaches to Decision Making *192*
- ❖ Challenges in Healthcare Data Analytics *194*

**9. Information Law and Governance in Clinical Practice ..... 199**
- ❖ Terminologies *199*
- ❖ Introduction *199*
- ❖ Ethical Legal Issues in Healthcare Informatics *200*
- ❖ Ethics Resources Used in Health Informatics *201*
- ❖ Ethical Legal Issues Related to Digital Health Applied to Nursing *202*

**10. Healthcare Quality and Evidence-based Practice ..... 205**
- ❖ Terminologies *205*
- ❖ Evidence-based Quality Improvement *206*
- ❖ Role of Nurse in Quality Improvement Through EBP *207*
- ❖ Healthcare Data Standards *208*
- ❖ Purposes of Health Informatics Standards *209*
- ❖ Development of Healthcare Standards *210*

*Index ..... 213*


JAYPEE BROTHERS

3

CHAPTER

# Information System in Healthcare

**At the end of this chapter, student will able to learn about:**

- Roles of information system in healthcare industry
- Structure and architect of healthcare information system
- Hospital Information System
- Components of hospital information system
- Importance of hospital information system for beneficiaries
- Types of hospital information systems

## TERMINOLOGIES

- **ADT (patient administration) interface:** ADT stands for "admissions, discharges, and transfers" and is a digital method that exchanges patient registration information (e.g., demographics) between two systems.
- **Cerner:** A company that specializes in electronic medical record software out of Kansas City, Missouri, offering software solutions across the globe.
- **Discrete results:** Results that are broken down into their individual values, units and reference ranges. These results can be more easily tracked and charted.
- **Data extraction (or abstraction):** A process by which information on documents (structured or unstructured) is saved off in another format that can be then used for other purposes.
- **Document management system (DMS):** An internal computer system within the organization that is the repository for patient documents. The documents are generally organized so that the documents can be found in a patient's electronic medical record.
- **Electronic medical record (EMR):** The digital collection of a patient's medical data in one provider's office, (i.e., hospital, clinic…etc.) that can be shared across different healthcare settings.
- **Electronic medical record software:** The piece of software that collects, stores and allows for the viewing of the patient's medical data. Examples include Epic and Cerner.
- **Health information management (HIM):** The part of the hospital organization responsible for the management of digital and hard-copy information that is important for providing patient care.
- **Informatics (clinical informatics):** The study of information technology within healthcare conducted by and for clinicians. Clinical informaticians transform healthcare by analyzing, designing, implementing, and evaluating information and communication systems that enhance individual and population health outcomes, improve [patient] care, and strengthen the clinician-patient relationship.

JAYPEE BROTHERS

## ROLE AND ARCHITECTURE OF INFORMATION SYSTEMS

### Introduction

Our society's healthcare system is essential. Recently, the way that people think about healthcare has changed dramatically, raising expectations and driving up demand for high-quality medical services and facilities. People can get medical help from hospitals. All sizes of healthcare businesses must manage and integrate clinical, financial, and operational information. A hospital information system needs to be established in order to complete this duty.

Every industry has undergone evolution as a result of technological development, which has sped up and smoothed the management process while benefiting more people globally. Health care is not an exception. Technology has greatly aided the fields of business, information technology, healthcare informatics, and healthcare data.

The health information system (HIS) is a technological marvel for the healthcare sector that makes managing patient data incredibly efficient. The adoption of this system contributes to a higher standard of patient care, lower operating costs, error-free administration data, and a more organized internal management process.

### Definition

A common word used to describe electronic systems created to manage healthcare data is healthcare information systems, also known as "HIS." Systems that gather, maintain, transmit, and store patient records fall under this category.

HCISs as powerful ICT-based tools able to make healthcare delivery more effective and efficient. ***—Rodrigues (2010)***

In order to collect and manage all the data linked to both clinical and administrative procedures, healthcare organizations, doctors, patients, and policy makers depend on HCISs, which are made up of a variety of applications.

### Role of Information System in Health Care

#### *Organized and Coordinated Treatment Process*

Protected health information (PHI) sharing between businesses and service providers is made incredibly simple thanks to the Health Information Approach, a technology-driven system. Patients can receive seamless and coordinated care from healthcare providers as a result of this approach.

#### *Improved Patient Safety*

With the aid of health information systems, one may save all the information and share it across many databases to increase patient safety because it facilitates easy access to patient data. Every time there are any problems involving the health of the patients, it sends an alarm signal. For instance, programme security checks can send alerts to healthcare providers about potentially harmful side effects of a patient using a medication without a prescription. By doing this, any severe error that results from a lack of information being available when making decisions can be avoided.

#### *Betterment in Patient Care*

By collecting and storing patient information, such as diagnosis reports, medical histories, allergic reactions, vaccination records, treatment information plans, test results, etc., health information systems provide healthcare professionals with a comprehensive and organized

JAYPEE BROTHERS

framework that enables them to interact with their patients in a better way and ultimately provide care to them more effectively.

### *Process of Performance Analysis without Hassles*

Health information systems can be used in a variety of ways to evaluate staff performance, analyze patient care, and gauge an organization's effectiveness and stability. By converting all records to computers, HIS reduces paperwork. Any staff-related decision can be based on a person's skill set and after paying close attention to the particulars of past performance.

### *Transformation in Clinical Procedure*

HIS aids in handling any stressful conditions that patients may encounter. You may virtually observe the movement of patients and what each individual patient goes through when they interact with medical professionals, office staff, lab technicians, and financial assistance. Paying close attention to this assists in identifying the areas that can use improvement.

### *Avoiding of Medical Errors*

Health information systems provide accurate reports and information since they maintain less paper work and automate and computerize processes. Various drug errors can be prevented as a result, and patients' safety can be guaranteed.

### *Easy Accessibility to Patients' Information*

According to a report released by the World Health Organization, the Health Information System collects data from the healthcare sector and other relevant industries, analyzes the data to ensure its overall quality, relevance, and timeliness, and then converts the data into information for health-related decision-making (WHO). Additionally, the more reliable the information, the better chance you have to make a choice, implement any policy or law, carry out health research, put any programme for training and development into action, and oversee the delivery of services, as well as after paying attention to details of prior performance.

### *Cost Effective*

Information systems for health enable health organizations to allocate resources strategically and potentially save significant sums of money, energy, and resources. As a result, it is possible to improve healthcare services for patients while significantly reducing costs.

### *Time Management*

Health information systems not only aid with financial savings but also time savings. HIS saves a substantial amount of time in the coordination of patient care and smooth hospital management by automating all patient personal actions and computerizing all patient information.

### *Improved Patient Satisfaction*

Health information systems boost patient happiness by adding value to the therapeutic process, which also makes the daily work of healthcare administrators and professionals easier. Patients can rely on the services, and when an organization gains a solid reputation with in healthcare industry, more patients are drawn to it, and it experiences a significant return on investment.

After examining the capabilities of HIS, it is clear that HIS offers healthcare professionals a wide range of possibilities to provide patients with better treatment while reducing costs and streamlining processes.

JAYPEE BROTHERS

## ARCHITECTURE OF INFORMATION SYSTEMS

### Components of the Architecture

1. **Users:** Doctors, nurses, patients, administrators, laboratory staff, pharmacists.
2. **Presentation layer:** User interface through web, desktop, or mobile applications.
3. **Application layer:** Core healthcare applications, such as, EHR, Laboratory Information System (LIS), Pharmacy Information System (PIS), Radiology Information System (RIS), Billing, and Clinical Decision Support System (CDSS).
4. **Database layer:** Stores patient records, laboratory reports, prescriptions, billing information, and analytics data.
5. **Network layer:** Enables communication through LAN, WAN, cloud services, and interoperability standards (e.g., HL7, FHIR).
6. **Security layer:** Ensures confidentiality, integrity, and availability through authentication, encryption, access control, backups, and disaster recovery.

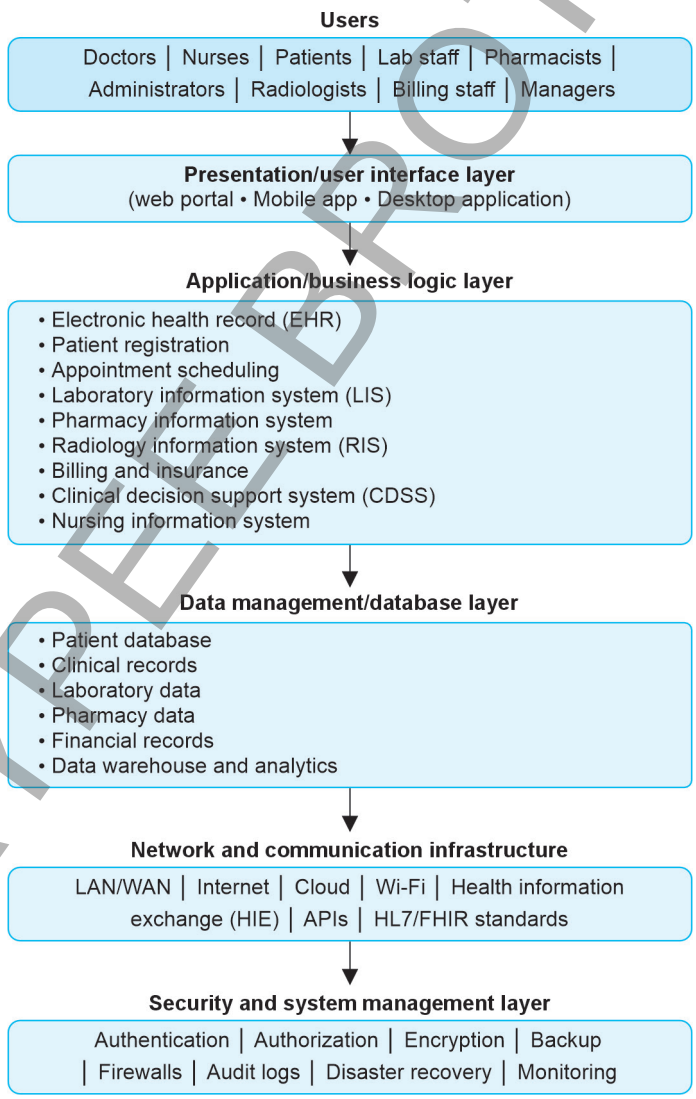


JAYPEE BROTHERS

## Architectural Models for Healthcare Information Systems

Health information systems (HISs) are essential to the delivery of health care and the collection of payment for it. Healthcare providers encounter numerous issues with their HISs as a result of poor building design.

From a functional viewpoint, an HCIS supports three main levels of a healthcare system:

- **Central government at national and regional level:** Central planning, resource management, setting of policies and procedures to be followed, general controls over financial performance, and quality and safety monitoring are all examples of central government at the national and regional levels. This level is organized differently depending on the type of each country's healthcare system, whose fundamental paradigms can be either the mutual-private model typical of the United States or the Anglo-Saxon model.
- **Primary care health services:** This level includes all of the infrastructure necessary to facilitate the delivery of services to the populace of a country or region. All service providers are included, including neighborhood practices, general practitioners, etc.
- **Secondary care health services:** This level largely refers to the mechanisms that facilitate communication between healthcare professionals. Architecture of information system in hospital.

An optimal local area network (LAN) architecture for a single hospital is one with a multi-tiered client-server structure. Users enter and retrieve data using clients, which are computers equipped with display monitors and data entry devices such keyboards and mouse, and subsequently store the information via the storage server into storage devices (hard disks). All of the layers are connected by a network of cables that are joined by switches and routers. Wireless elements might also be present in the network. An example of a typical HIS system architecture implementation is shown below.

## Typical HIS System Architecture

The architecture plan of hospital needs some of the physical layout which are as follows:

- Adequate processing speed
- A sufficient amount of ram to temporarily store data, while it is being viewed or typed.
- A monitor with a display that can show both data and apps.
- Data entry devices, such as keyboard, bar-code reader, image scanner, and pointing devices like a mouse.
- An OS front interface that enables the operation of the aforementioned hardware and makes it easier to communicate with the server places that use complicated visuals should have video/graphic cards.

## Hospital Information System Hybrid

Clients typically choose desktop and laptop/tablet PCs with powerful CPUs and lots of memory. Through the use of appropriate cables and wireless connections, they are connected to the network. These can be used as hybrid clients or both thick and thin clients.

- **Thick hybrid:** Client PCs with quick CPUs and lots of RAM memory are needed for a thick client installation. Applications software is either fully or partially installed on them.
- **Thin hybrid:** In a thin client strategy, only a browser is loaded into the client. When necessary, the applications are obtained from the applications server.

JAYPEE BROTHERS

Less RAM memory is needed and lower end CPUs may be utilized. However, because images and graphs must be presented in an HIS setup, the thin client hardware—low end computers with little computing power and memory—is insufficient. PCs are more suited in their place. Each client can be used as an image viewer as well as for a wide range of administrative and medical (office automation, e-mail) applications. All of these applications must be supported by the operating system (OS) for the front end (presentation logic). Additionally, it ought to support user interfaces (GUIs) that meet users' needs.

## Web Network

In the local area network, the system might use web technologies. Similar to thin clients, a web client can be used to host the browser. A secure network, such as a Virtual Private Network (VPN). SERVERS, should be used to connect to the hospital's LAN if a care provider needs access to HIS through patients in locations other than the hospital, such as from home or another hospital/clinic.

The server-storage system in a thorough integrated HIS must support both management applications and patient care applications. A hospital operates every day of the year, 365 days a year, hence the system shouldn't malfunction. Currently, a 99.9 percent uptime level is desired. The ability to make apps available and guarantee that data can be saved and retrieved without interruption should be duplicated in order to accomplish this. This translates into offering multiple locations for each application to dwell and store data.

Redundancy is the ability of the system to continue operating even if a component fails. There are many users of the system in patient care at any given moment, which generates a lot of data flow. Application servers and database servers both need to have enough processing power and memory to handle requests. A lot of data is typically needed at any given time, and it builds up over time. The storage device must be able to accept and release data quickly and have a big storage capacity.

A full system must support other functions in addition to daily operations. Therefore, copies of systems and applications must be made available for other crucial purposes. Domains are the alternative forms of clinical applications and distinct databases. These often consist of:

- **Production or operations domain:** The operations domain provides real-time, accurate data for daily use.
- **Analytical domain:** Reports can be produced by analyzing actual data, though not necessarily real-time data.
- The build or test domain contains a version of the programmes that is frequently distinct from that of the operational environment. It might have false information in it.
- **Train domain:** The train domain uses the same software as the operations domain, but it only uses made-up or fictitious data.

Despite the variety of domains and versions, this does not always imply the need for separate server-storage hardware.

## Application Server

Managerial applications and clinical apps typically employ different servers and storage systems. This may necessitate the installation of numerous physical servers and storage systems in addition to the requirement for duplication. The number of physical servers can be decreased by using virtualization technologies. It is possible to employ a cluster of physical servers (at least two). Many virtual servers will be housed on each physical server.

JAYPEE BROTHERS

Users are able to communicate with servers and request help with the operation of an application or a specific feature, as well as with the entry or retrieval of data. Through the usage of the application server, the user may have access to any programmes that they choose (s). When the client approach is used, all of the application software is stored on the server that manages the applications. In the event that personal computers (PCs) are used, it is possible that the client computer will save part of the data. If the thin client technique is employed, the applications server houses all of the applications software. If PCs are used, some of the data might be stored on the client computer.

## Database and Data Storage Hardware

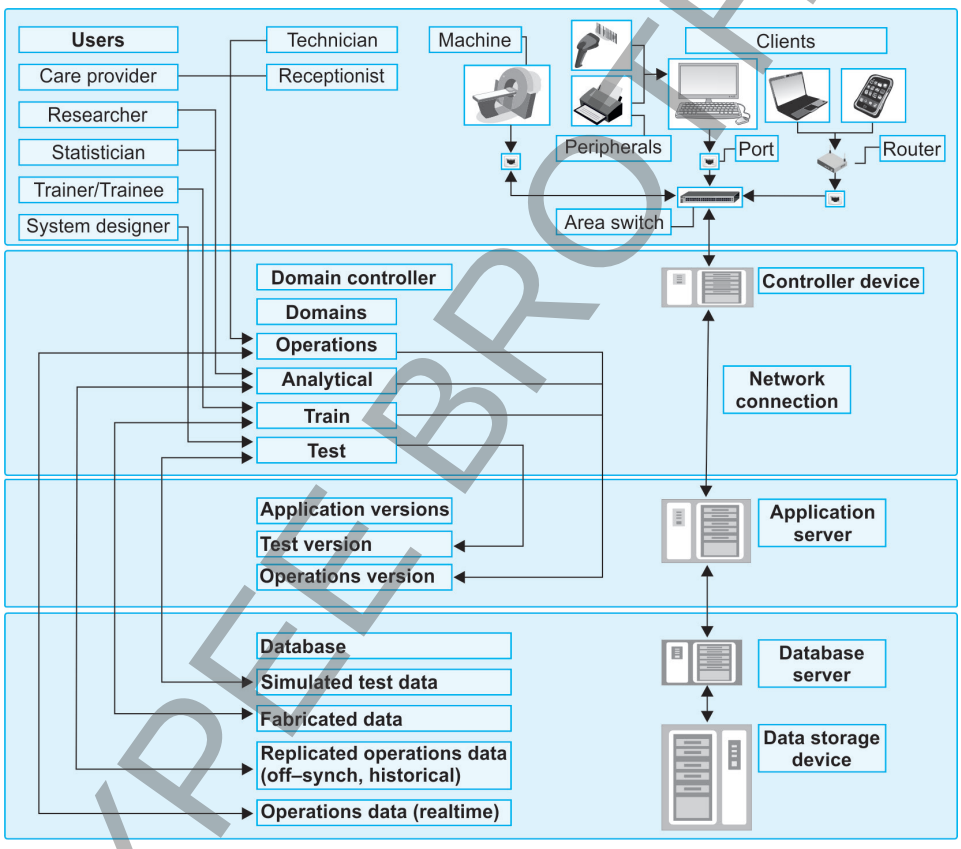


**Fig. 3.1:** Database domain.

## Database Server

Data input and output from storage devices, such as storage area network (SAN storage) or network area storage are controlled by database servers or database/storage servers (NAS). The database management system is the programme that specifies the database's content and organizational structure (DBMS). Depending on the kind, it could be relational, hierarchical, or object-oriented. A suitable system software is required for both the database server and the DBMS (OS).

JAYPEE BROTHERS

Currently, a set of hard drives serve as the data storage medium (disk array). Data backups are mostly stored on magnetic tapes (tape libraries). The network must possess the following characteristics:

- Sufficient bandwidth corresponding to volume of data that will traverse through two points to be connected.
- Redundancy to ensure an alternative passage of data if one route is impassible.

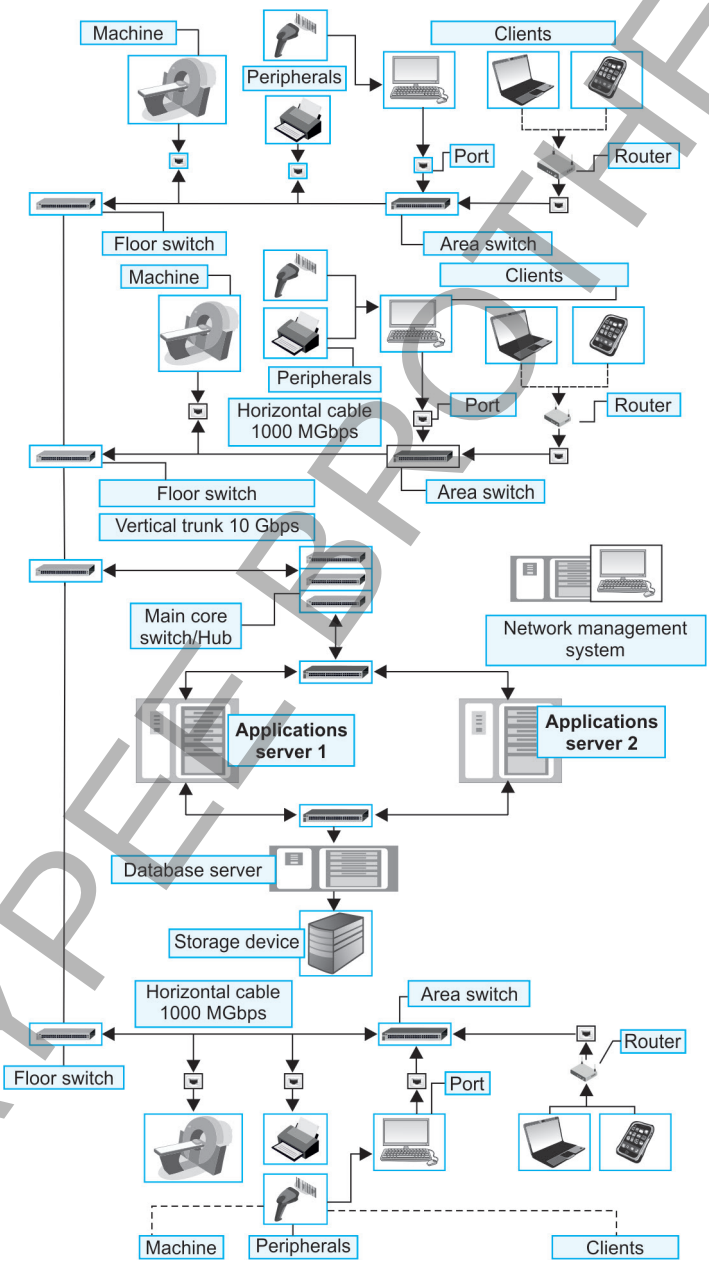


**Fig. 3.2:** Database management system.

JAYPEE BROTHERS

One approach is to install two single mode fiber optic cables as the hospital's backbone, one on each side. Each cable's structure and diameter, which is typically 9/125 micrometers, influence the band-width, or rate at which data is transmitted, which is expressed in terms of bits per second (or other units of data per unit of time). Standard core cables can deliver data at a rate of 10 Gigabits per second. At the access level, the backbone is expanded using multimode cables made of four-core (50/125 micrometer) cables that can transmit data at speeds of 10, 100, and 1000 megabits per second.

## Network Architecture

The domain controller (DC) allows the user to access the appropriate "domain" or version of the application or database, i.e., production or operations domain, analytical domain, build or test domain, train domain, in the HIS system as detailed here.

## Phases to Use Network Domain

**Phase 1:** Privileges are set in order to determine who has access to a domain. The controller confirms the user's identity (by username and password). The active directory is the key component of the controller if the Microsoft Windows operating system is used.

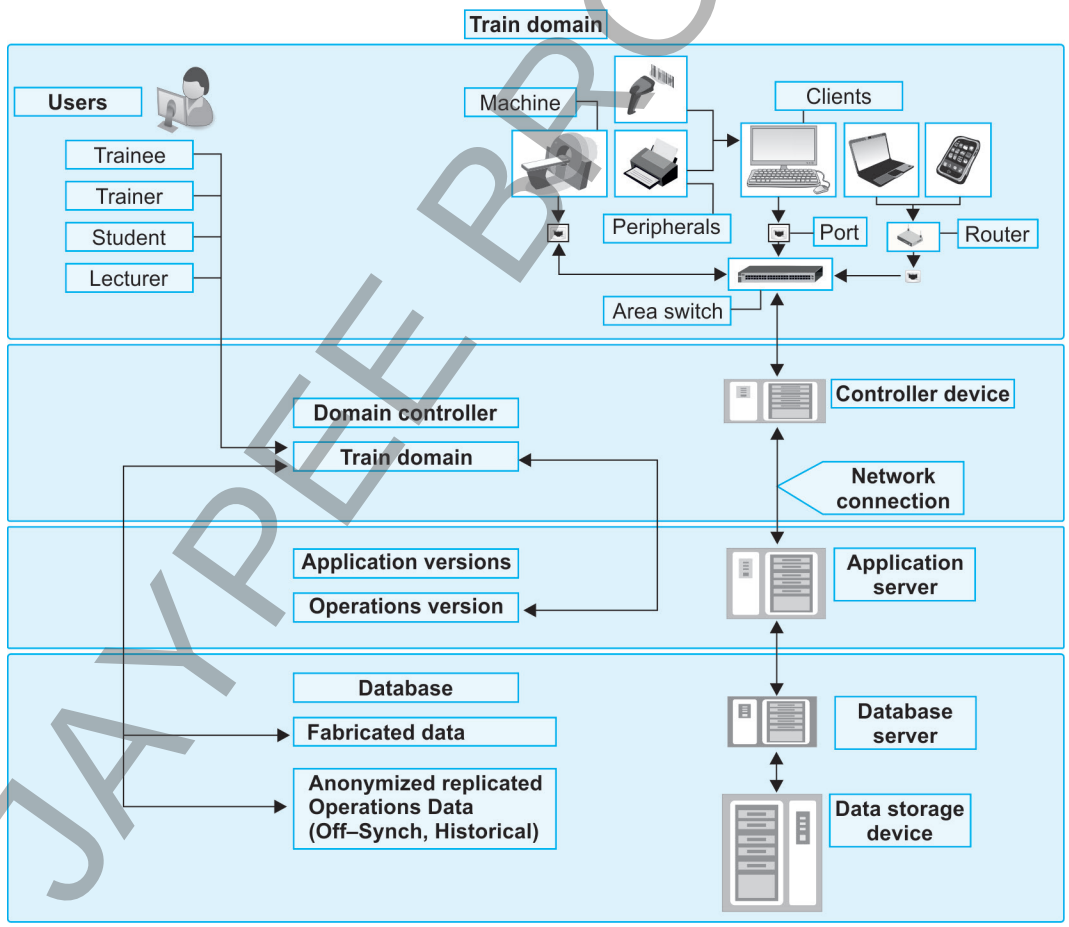


**Fig. 3.3:** Training domain database.

JAYPEE BROTHERS

**Phase 2:** Users are granted access to the domain that matches the type of work they will be doing. For instance, the system should be configured so that users are forwarded to the train domain during training.

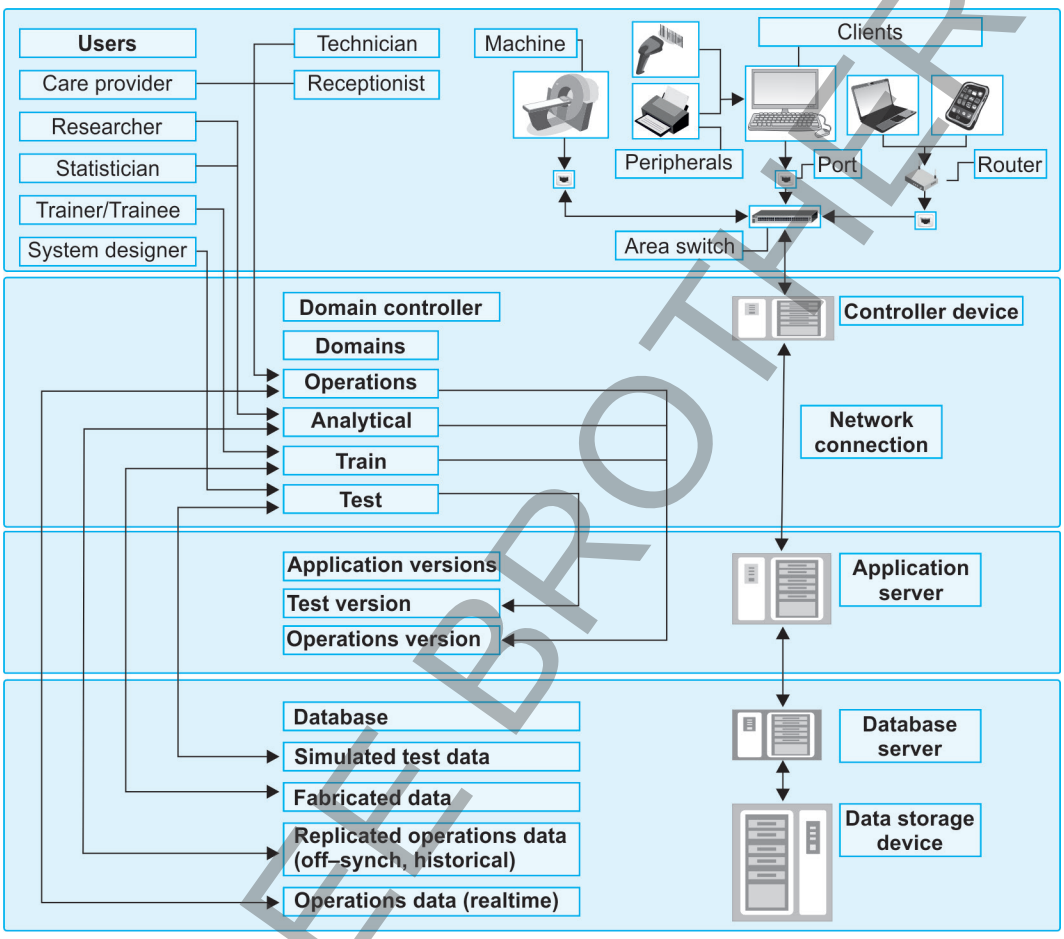


**Fig. 3.4:** Phase 2 : Train domain

**Phase 3:** The user employs the analytical domain when performing data analysis on historical data. (This section needs editing) at its core, active directory is a database management system. This database can be replicated using a multi-master replication technique over any number of server computers (referred to as domain controllers), allowing changes to be made to any independent copy while simultaneously propagating those changes to all other copies.

**Phase 4:** An enterprise's active directory database can be divided up into replication units called "Domains." The method of replication between server computers can be set up very flexiblely to allow replication even in the event that communication between domain controller computers fails, as well as to replicate effectively between locations that might be connected via WAN connectivity with limited bandwidth. The active directory is used by windows as a repository for configuration data.

JAYPEE BROTHERS

**Phase 5:** The most important of these purposes is the storage of user logon credentials (usernames and password hashes), so that computers can be set up to make use of this database and provide centralized single sign-on for many devices (referred to as "members" of the "Domain"). The explicit naming of user accounts from the active directory domain in permissions called access control lists (ACLs) or the logical grouping of user accounts into security groups are two ways to control access permissions to resources hosted by servers that are members of an active directory domain.

**Phase 6:** The active directory is where the names and memberships of these security groups are stored. The domain controller would act as a bridge between the front end and the server, whether it were located on a standalone computer or inside the primary server.

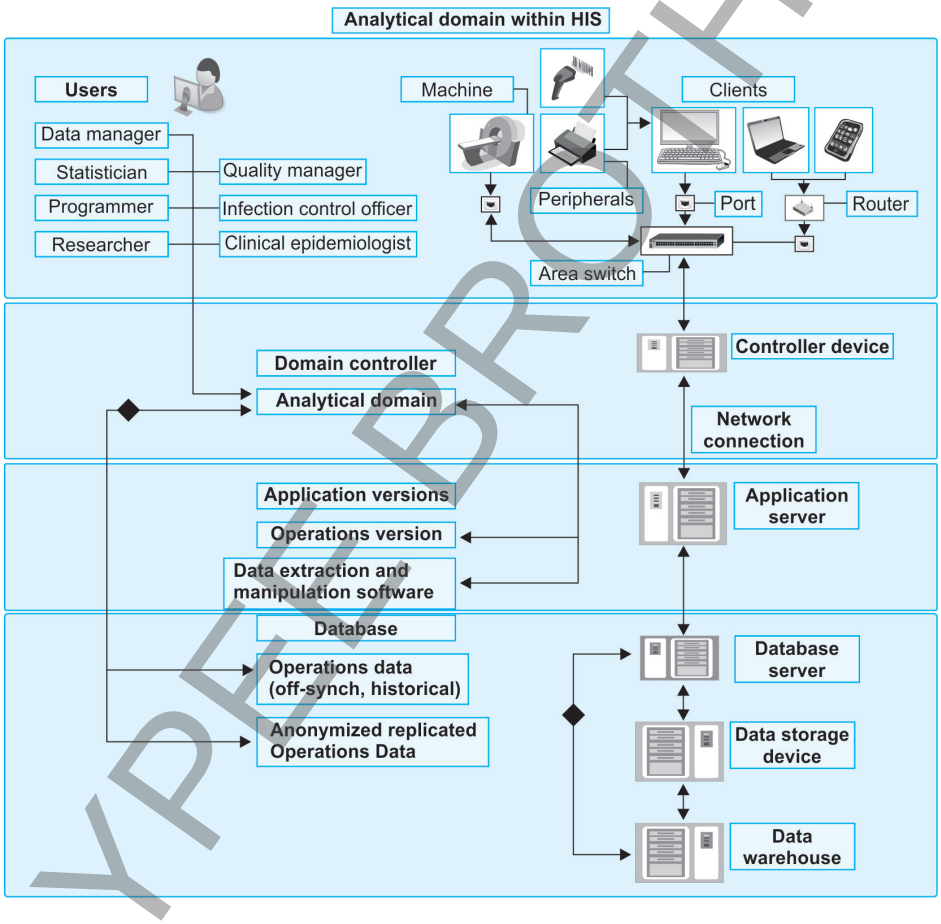


**Fig. 3.5:** Phase 3: Analytical domain.

## System Manager

A domain is only set up for IT administration needs. Data on HIS patients is not accessible. Using a suite of network management systems made up of Network Configuration Manager, Storage Manager, Virtualization Manager, etc. (for example, solar winds or manage engine), access to sensitive information will be strictly controlled, including configurations of various devices in

JAYPEE BROTHERS

(servers, applications, network devices, storage devices), access credentials, SNMP settings, and access control lists. In accordance with a person's work category and status, privilege will be divided. Our change management software supports compliance with laws like HIPAA and PCI by using system administrator staff roles, permissions, and activity tracking available in the same application to guard against illegal network configuration modifications.

**The following are some of the crucial factors to take into account when choosing an HIS:**

- **Total cost of the package:** In general, HIS providers are pleased to come and talk to you about the needs of your hospital. Hospitals of diverse sizes and financial capacities can find solutions. A hospital information system that has a low total cost of ownership is crucial. By creating a design that uses less hardware, some vendors can lower costs. This kind of design is known to lower long-term maintenance expenses while simultaneously lowering up-front acquisition costs.
- **Web-based system:** A good HIS system needs to be accessible online in addition to having user-friendly features. Because the information is available online, authorized personnel can access it from any location and at any time. This frees up caregivers from being confined to office workstations and gives them information when they most need it. If information is shared across two or more hospitals, a web-based system becomes even more crucial. If healthcare facilities adopt an internet-based HIS, they can instantly transmit pertinent data across different geographic areas. For better care or specialized treatment, a hospital could elect to transfer a patient to another facility.
- **Implementation and support:** Humans are always resistant to change, and implementing or upgrading a medical information system could result in backlash from staff members. It is always preferable to request staff training as well as implementation support from the vendor. Select a vendor that provides telephone or online support available around-the-clock so your hospital staff can get help right away. Some hospitals will also speak with their employees before making a purchase decision, because they could be able to share new information with you or alert you to details that others might have missed.
- **User-friendly:** The user interface needs to be clear and simple.

## Examples of Healthcare Information Systems

### *Electronic Medical Record (EMR) and Electronic Health Records (EHR)*

The clinic's computer systems store a patient's permanent electronic medical record (EMR). This file, which is mostly utilized by primary care physicians and specialists, may include information about a patient's family history, allergies, medications, diagnoses, surgery information, and progress notes. Even though EHR can be thought of as a digital record that performs all that EMR does and more, these records might still need to be printed out in order to be shared with other medical professionals.

Several doctors and healthcare organizations outside of a practize utilize EHR to organize patient data.

### *Systems for Clinical Information (CIS)*

Rapid information collection, archiving, processing, and distribution to decision-makers are the main objectives of clinical information systems (CIS). CIS is mostly utilized by hospitals and can include health histories, medications, doctor's notes, dictation, and any other information that is preserved together electronically (labs, pharmacies, radiology, and ICU). The main benefit of this system is its capacity to interface with other systems and exchange data with other instruments.

JAYPEE BROTHERS

### *Practice Management Software (PMS)*

Many allied healthcare professionals utilize practice management software, including psychologists, physiotherapists, and nurses. The use of a PMS makes it easier to manage a clinic's daily activities, such as online scheduling, billing, patient reminders, and other administrative tasks. Depending on the type of medical practice the software is developed for, practice management systems' features can change. Additional elements that are typically included with PMS include clinical notes, video sessions, online forms, links, and patient payments.

### *Patient Registries*

A patient portal enables online access to the patient's personal information, including previous appointments, medical history, diagnoses, and more. Any internet-connected device, whether a mobile phone, desktop computer, laptop, or tablet, can normally access a patient portal around-the-clock. Patients can also set up appointments and have direct conversations with their medical personnel.

#### *Master Patient Index (MPI)*

The Master Patient Index (MPI) is an electronic database that assigns patients a special identifying number based on their geographic location, facilitating cross-referencing between healthcare systems and providers, including hospitals, doctors, labs, and imaging centers. Keeping patient data in the system allows for more effective and efficient transmission of medical records. For instance, a patient who is pregnant may need several healthcare services throughout their pregnancy and will need to see a range of healthcare specialists, including their doctor, OB, midwife, and laboratory technician.

#### *Remote Patient Observation*

Remote patient monitoring reduces hospital readmissions by allowing individuals to regularly use a medical gadget and evaluate their health outside of a clinic or hospital. In 2016, 7 million people employed this technology as part of their care; it is anticipated that 50 million people will do so in five years. These tools can keep an eye on things like:

- Unhealthy weight gain or loss
- High or low blood pressure
- Increasing or decreasing sugar levels
- Unusual oxygen saturation values

This makes it possible for healthcare professionals to remotely check on patients' health and status updates and use video conferencing to enhance patient care in general.

### *Tools for Clinical Decision Support*

Clinical decision support (CDS) systems can notify healthcare professionals of information that they could be missing and foresee future issues, such as a patient who is dangerously combining medications. By recommending "next actions" based on a significant amount of digital data, they can assist clinicians in making judgments regarding treatments.

## HOSPITAL INFORMATION SYSTEM

All information processing as well as the associated human or technology actors in their respective information processing roles make up the socio-technical subsystem of a hospital

JAYPEE BROTHERS

known as the hospital information system. For the purpose of managing patient care and related administrative chores, a hospital will implement a hospital information management system. The system's total efficiency may be improved by automation, which also generates the crucial project reports needed for controlling operations, performance, quality, planning, and reporting.

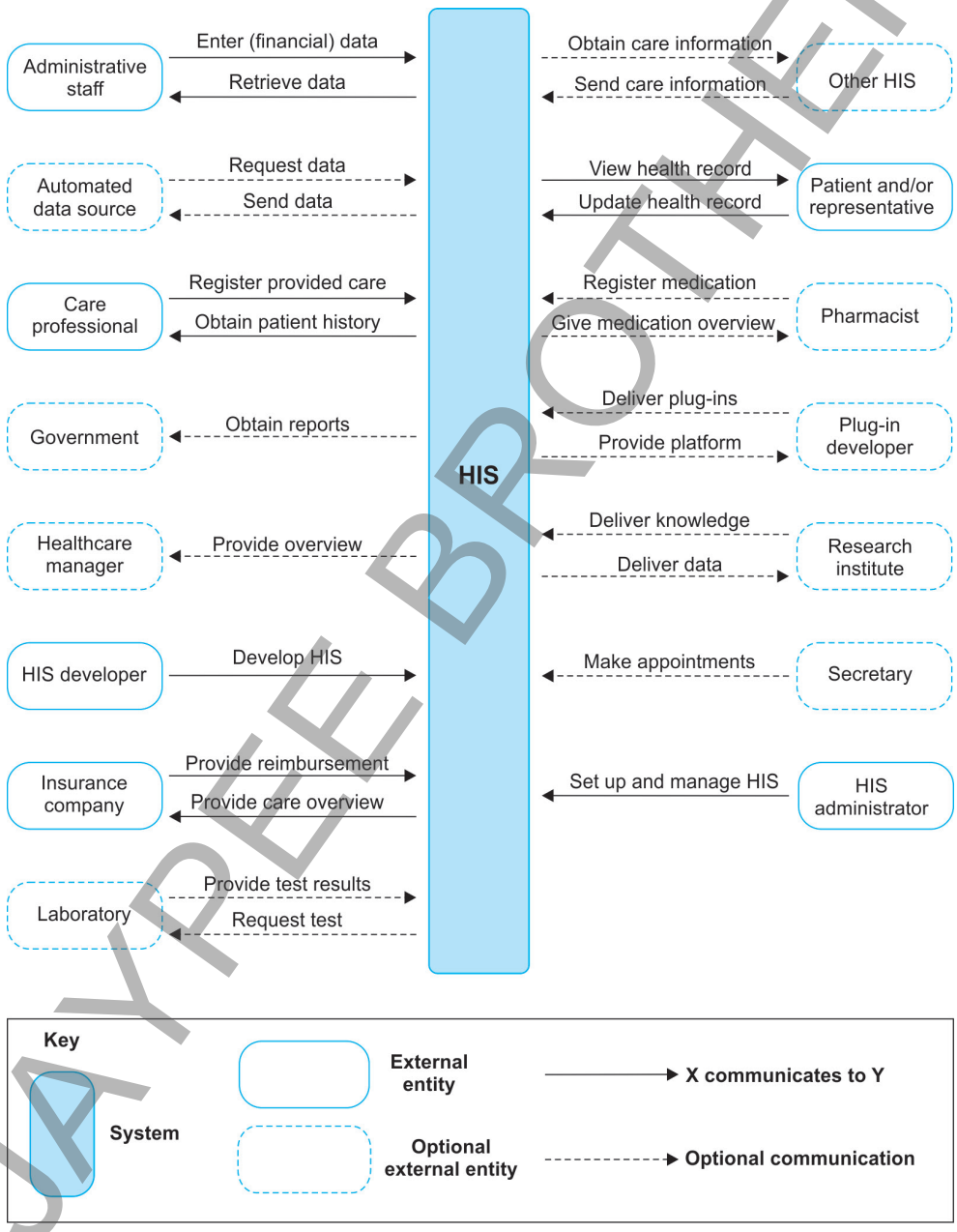


**Fig. 3.6:** HIS communication flow.

JAYPEE BROTHERS

Hospital information systems (HIS), a subset of health informatics, are primarily focused on the administrative needs of hospitals. An HIS is frequently a comprehensive, integrated information system designed to manage all facets of a hospital's operations, including the processing of services in compliance with medical, administrative, financial, and legal considerations. Other names for the same thing include hospital management system (HMS) and hospital information system.

Healthcare providers, on the other hand, have recently altered their behavior and are looking into all available angles that allow ICT to enhance managerial operations and the quality of healthcare while remaining affordable. This is because there is an unprecedented amount of competition and pressure to increase the effectiveness and quality of care. The HCISs, which are composed of numerous systems, should be integrated and coordinated as a whole, in accordance with this new point of view, to support treatment in an organizational and procedural framework that is patient-centric. HCISs are thus in a unique position to receive, store, process, and transmit timely information to decision-makers for better healthcare coordination at all of the aforementioned levels of analysis.

### Definition

Any quantitative and qualitative data that might help doctors and health decision-makers better understand disease processes and healthcare difficulties, as well as to prevent, identify, and treat health issues, is considered to be health information. An information system for managing a health programme or system and keeping track of health-related activities consists of interconnected component elements for collecting, processing, and distributing information (management information, health statistics, and health literature).

It is the information system that gathers, stores, processes, retrieves, and communicates patient care and administrative information using computers, communication tools, and software.

## AIMS OF HOSPITAL INFORMATION SYSTEM

- To ensure that electronic data processing provides the best possible assistance for patient care and administration.
- In order to give patients the best care, results, and administration, networked electronic data processing is used to capture data as it is generated and show it where it is needed.
- Accurate data storage, reliable usage, quick access to data, secure data storage, and reduced usage costs are the main objectives for hospital information systems.
- Information regarding a patient's medical history is centralized in hospital information systems.
- These systems help healthcare practitioners better organize patient care.
- HIS help healthcare providers communicate both internally and outside. The HIS may be used to manage organizations, in this case a hospital, and their official paperwork, financial situation reports, personal information, utility bills, and stock levels. It also maintains secure patient records for medical histories, prescriptions, operations, and laboratory test results.
- The HIS may defend organizations from faults in official documents, such as mistakes in tax preparation, overstock issues, and scheduling conflicts.

JAYPEE BROTHERS

| *History of hospital information system* | *Events* |
|---|---|
| **1970s** | Began mostly with financial systems, offering assistance to the company's billing, payroll, accounting, and reporting systems<br>Radiology, laboratory and pharmacy |
| **1980s** | With significant expenditures in systems for cost accounting and materials management, financial systems rose to prominence once more |
| **1990s** | Healthcare systems that are used throughout an organization, such as clinical data archives and ideas for a completely computerized electronic medical record (EMR) |

### Benefits of HIS

- Efficient and precise management of finances, patient food, engineering, and medical aid distribution.
- Having a broad perspective on hospital expansion is beneficial.
- Better drug monitoring and efficacy research that reduces unfavorable drug interactions while encouraging more sensible use of pharmaceuticals.
- Hospital software is simple to use and eliminates errors brought on by handwriting. It also improves information integrity, lowers transcribing errors, and minimizes duplication of information entries. Computers using cutting-edge technology function flawlessly while retrieving data from servers or cloud servers.
- A quicker and better reaction from the healthcare system, instant connection to experts and other service providers.
- Using computerized clinical applications, healthcare is more affordable.
- In an emergency anywhere in the globe, data is instantaneously available thanks to electronic medical records.
- Reduces extra time and travel for medical professionals, and aids in automatically monitoring for drug and other interactions.

## WHO BENEFITS FROM HOSPITAL INFORMATION SYSTEM?

The staff and patients, computer users, and administrative staff can all provide information on the hospital information system. Hospital information systems can be identified by their advantages, functions, types of processed data, and types of services they provide. The groups listed below gain from hospital information systems:

### Physicians

- Expands the use of computerized provider order entry (CPOE)
- Enhances the access to and accuracy of the necessary patient drugs
- Enhances care through the logging of all orders
- Reduces medication error rates
- Enhances clinicians' efficiency and effectiveness by providing crucial patient information (such as allergies) at the time of ordering, as well as conflict checking, order checking, and online access to best practice information

JAYPEE BROTHERS

### Nurses and Allied Health Professionals

- Gives quick access to orders and outcomes
- Gives quick access to patient details, prescription information, and test results
- Enables easier online information access (i.e., suggested medications or drug alerts)
- Reduce the use of paper, cut down on errors, and improve patient safety
- Reduces the need for paper, reduces mistakes, and improves patient safety

### Ward and Registration Clerks

Reduces duplication of work by providing a single point of contact for patient registration information.

### Clinical Benefits

- When and where they are needed, healthcare personnel will be able to access a patient's health information and visit history, which will improve their ability to coordinate care.
- The EPR will be integrated with information from diagnostic information systems like X-ray and laboratory, improving internal and external communication among healthcare practitioners. The EPR will eventually be applicable everywhere.
- Permit medical staff to access a patient's medical records from different facilities.

### Administrative Benefits

- Reduces the need for paper, cuts down on mistakes, and makes it easier to find information online, (e.g., suggested prescriptions or drug alerts).
- Lessen the need for patients to re-register at various sites through improving internal and external communication among healthcare professionals.

## SUBSYSTEMS OF HIS

The usage of hospital information systems is part of a "integrated effort to gather, process, report, and apply health information and knowledge to impact policy-making, programme action, and research." HISs come in a variety of forms, including routine- and clinical-HISs. A hospital information system's components include two or more of the following:

### Picture Archiving and Communication System (PACS)

A PACS is a type of medical imaging system that enables the affordable storage and simple transfer of images from many modalities (source machine types). PACS does away with the need to physically file, retrieve, or move film jackets by transferring digitized images and reports digitally. PACS images can only be stored and transferred in the DICOM format (Digital Imaging and Communications in Medicine). Non-image data, such as scanned documents, may be added using consumer industry standard formats like PDF after being contained in DICOM (Portable Document Format). A PACS is made up of four key components: imaging methods including computed tomography, magnetic resonance, and plain-film X-rays.

JAYPEE BROTHERS

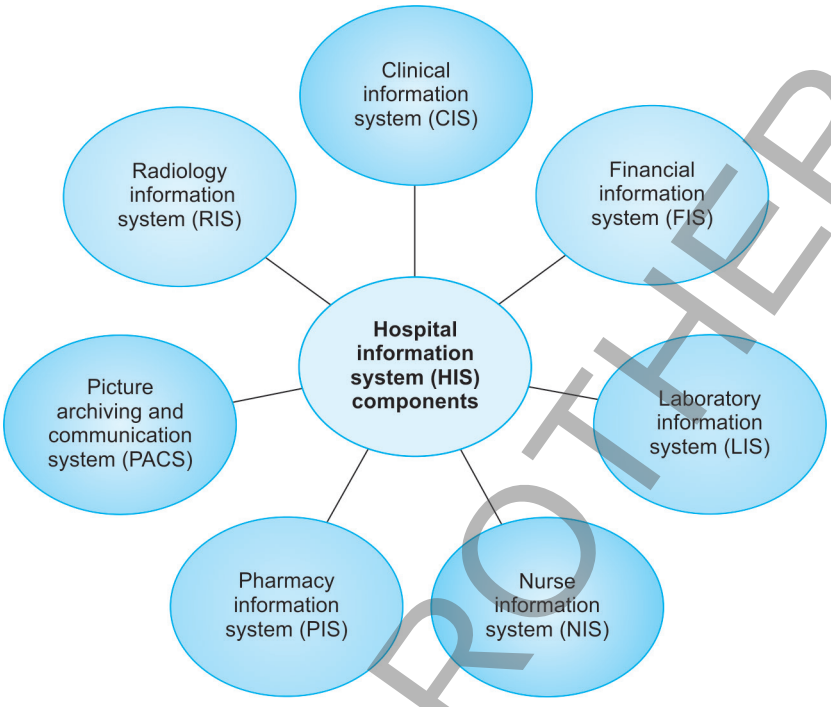


**Fig. 3.7:** HIS components.

Imaging, as well as a secure network for transmitting patient data, workstations for analyzing and evaluating images, and archives for the storage and retrieval of images and reports.

## Radiology Information System (RIS)

These systems' capacity to offer radiological billing services, appointment scheduling, reporting, and patient information storage makes them popular as well. Technology advancements have made radiology practices more complex, and many institutions are increasingly using RIS to run the business side of their businesses.

## Clinical Information Systems (CIS)

A clinical information system is a computer-based platform created for the collection, storage, manipulation, and dissemination of clinical data vital to the delivery of health care. Healthcare organizations can enhance the provision of clinical services with the aid of clinical information systems. Clinical data and reports are presented through hospital information systems, allowing doctors to make more informed choices at the point of care. An information system called a clinical information system (CIS) is made expressly for use in critical care settings like intensive care units (ICU). It may connect to the several computer systems in a contemporary hospital, including radiology and pathology. It compiles data from every one of these programmes into an electronic patient record that doctors can access at the patient's bedside.

JAYPEE BROTHERS

### *Benefits of a Clinical Information System*

A CIS can help patients and clinicians by:

- Enhancing communication among the numerous healthcare providers who provide care for each patient;
- Giving clinicians all the data they need to make wise decisions;
- Simplifying the process for patients to have X-rays and scans when necessary;
- Encouraging quality improvement; and
- Facilitating better clinical research.

## Clinical Information Systems in Intensive Care

ICUs use a variety of medical instruments to continuously monitor seriously ill patients. There is a huge volume of information production. Clinicians can make the best choices with the help of this knowledge. As opposed to roughly 32 clinical measurements per day per patient in a standard ward, it is estimated that ICU clinicians manage about 1700 clinical measurements each day per patient.

The majority of these metrics must be taken by doctors without a CIS, who then document them on paper-based, 24-hour "ICU flow charts."

All of these measurements can be electronically recorded, collected, and captured using a CIS. This decreases the need for numerous paper forms, saves time, and lowers the possibility of error.

## Nursing Information Systems (NIS)

To assist nurses in giving patients better care, these computer-based information systems were created. A strong NIS may carry out a variety of tasks and provide advantages like better staff schedules, accurate patient charting, and improved clinical data integration. Through schedule apps that allow managers to handle absences and overtime, the nursing department's workforce can be more effectively managed. A more cost-effective staffing strategy can be achieved by using the solution to monitor personnel levels. Applications for patient charting let users enter information about patients' vital signs. It is also used by nurses for admission details, treatment plans, and any pertinent nursing notes. All significant information is safely kept and is accessible when needed. Clinical data integration is also incredibly helpful, since it enables nurses to gather, access, and analyze clinical data before integrating it to create a patient's care plan. In the end, all of these NIS aspects result in shorter planning times and more accurate assessments and evaluations. Since, there is always a reference for pharmaceuticals that are prescribed electronically, the likelihood of prescribing the incorrect treatment diminishes as well.

## Physician Information Systems (PIS)

PIS systems, as their name suggests, are suggested for use by the government and aim to enhance medical practitioners' practices. The federal government's stimulus package, which aims to improve health care, is available to doctors. Different packages are available to fit different budgets and can be used to boost productivity, reduce expenses, and provide high-quality patient care. Electronic medical records (EMRs), electronic health records (EHRs), and other commonly used and well-liked apps are used by physician information systems, which are given through computers, servers, and networks. The majority of these programmes offer round-the-clock remote help, enabling hospital staff to diagnose issues that arise while using the system.

JAYPEE BROTHERS

### Pharmacy Information Systems (PIS)

PIS assists pharmacists in keeping track of the way medication is used in hospitals and was created to meet the expectations of a pharmacy department. PIS aids consumers in managing drug allergies and other side effects of medications. The method helps give the right medications depending on the patient's physiologic variables and enables users to identify drug interactions.

### Financial Information System (FIS)

Computer programmes called financial information systems are used to run a hospital's financial operations. Even though healthcare organizations' top priority is saving lives rather than generating profits, they do incur running costs from daily operations, such as purchases and employee salaries.

### Laboratory Information System (LIS)

A software-based laboratory and information management system known as a laboratory information management system (LIMS), also known as a laboratory information system (LIS) or laboratory management system (LMS), provides a number of essential features that support the operations of a modern laboratory.

## INFORMATION SYSTEM FOR PATIENT CARE

The hospital information system (HIS) can be broadly divided into two halves:

1. Systems for the patient care function
2. Managerial information systems

A group of systems that can be collectively referred to as information systems for the patient care function support the clinical and other patient care-related functions. Although the phrase "patient care information system" is appealing and appropriate, it is regrettably only utilized by a tiny number of supporters. Since using this extra category level as the parent and the clinical information system (CIS) as the child clarifies the nomenclature, it will be used in all upcoming conversations. Not all information systems for patient care are referred to as clinical information systems. Instead, the system that supports or promotes direct patient care functions alone bears the name CIS. The other half of the system is the information systems for clinical support services which are made up of several modules.

### Patient Care Information System

EMR/EHR systems is a phrase that is frequently used. Since information systems are only helpful if they make work easier rather than just "the development, storage, and management of electronic medical data," as some people understand it, this term is misleading and shouldn't be used at all.

### Patient Care Information System—Objectives and Functions

These subsystems and applications, which serve as a system for streamlining operations, are anticipated to make best use of computerization and information technology to achieve the following goals:

- Productivity
- Effectiveness
- Appropriateness
- Efficiency

JAYPEE BROTHERS

for detailed information on nursing books, visit our website www.ejaypee.com, for detailed information on nursing books, visit our website www.ejaypee.c

# Nursing Informatics & Technology
## (Computer for Nurses)

***Salient Features***

- Fully aligned with the revised INC syllabus for BSc Nursing
- Presents updated concepts of nursing informatics and digital healthcare
- Integrates theoretical knowledge with practical applications in nursing
- Covers computer applications in patient care, education, administration, and research
- Provides comprehensive coverage of EHR, CIS, HIS, and Nursing Information Systems
- Explains interoperability and standardized terminologies, including SNOMED CT, ICD-10-CM, NANDA, NOC, and the Omaha System
- Highlights patient safety, clinical risk management, and informed decision-making
- Discusses telehealth, mobile technologies, artificial intelligence, and data analytics
- Addresses ethical, legal, privacy, and governance issues in digital healthcare
- Explores e-Health, public health informatics, and the nurse's role in technology-enabled care
- Emphasizes healthcare data management, analysis, presentation, and knowledge sharing
- Promotes evidence-based practice and quality improvement through informatics
- Written in a clear, systematic, and learner-friendly manner

**Dipak Sethi** PhD (Nursing) is an accomplished academician, researcher, author, and nursing education professional currently serving as the Dean, College of Nursing, Noida International University (NIU), Noida, Uttar Pradeesh, and as the Central IQAC Secretary at NIU. With a strong commitment to academic excellence, research, innovation, and quality assurance in nursing education, he has made significant contributions to teaching, research, and institutional development. He has contributed as Principal Investigator to 32 Scopus-indexed publications and has been associated with 8 patents as a primary investigator. He has also authored 15 books published by Jaypee Brothers Medical Publishers and has contributed to externally funded research, including two ICMR-sanctioned projects on DNA sequencing, along with an intramural research project on cervical cancer at NIU. His professional engagements include membership with QCI, Maharashtra, and international academic association as a visiting faculty member at Thumbay University of Medical Sciences, Ajman, UAE. Through his academic leadership, research initiatives, publications, and commitment to quality improvement, Dr Sethi continues to contribute to the advancement of nursing education and evidence-based healthcare practice.

**Sukhbir Kaur** PhD (Nursing) is Principal-cum-Professor, Sri Guru Arjan Dev Ji Institute of Nursing, Amritsar, Punjab, India. She is a highly accomplished academician and researcher with over 18 years of extensive experience in the field of nursing education. She completed her BSc Nursing in 2006 from the National Institute of Nursing Education, PGIMER, Chandigarh. She earned her MSc Nursing in Psychiatric Nursing in 2011, for which she was awarded a Gold Medal by Baba Farid University of Health Sciences in recognition of her academic excellence. She further pursued her PhD in Nursing from Desh Bhagat University in 2019. In addition, she holds a Post Graduate Diploma in Hospital Management from IIMM, Pune, Maharashtra, and Fellowship in Post-Doctoral Nursing Research. An expert in psychiatric nursing, she has made significant contributions to research and academia. She has authored more than 30 publications in indexed national and international journals and has received first prizes in multiple paper presentations. Her PhD research, titled "Effect of Psychosocial Intervention on Self-Concept of Adolescents of Substance Using Parents", is recognized in the Cochrane Library. She is also a prolific author, having written more than six books in the areas of nursing management, nursing informatics, and mental health nursing. She has contributed chapters to various academic books and serves as a reviewer for several nursing publications. She has been invited as a speaker and resource person at numerous national and international conferences and seminars. Additionally, she is a member of the editorial board of the American Journal of Nursing and Health Sciences and other reputed journals. She is also a lifetime member of several professional nursing societies. In recognition of her contributions to the field, she has been inferred with various awards like young scientist award, Best Academician award and Eminent Faculty Award.

Scan for more nursing titles...

Buy from ejaypee

JAYPEE BROTHERS

ISBN 978-81-6770-816-8

JAYPEE BROTHERS