

ORAL & MAXILLOFACIAL IMAGING TECHNIQUES

Shivlal M Rawlani • Shobha S Rawlani

JAYPEE

Contents

1. Introduction **1**
- Imaging Techniques for Maxillofacial Region 3

2. Conventional Radiography **5**
- Intraoral Radiographic Technique 5
- Intraoral localization Techniques 21
- Extraoral Radiography 23
- Posteroanterior Projection (also known as the Occipitofrontal Projection of the Nasal Sinuses) 29
- Radiography of the Maxillary Sinuses 31
- Radiography of the Mandible 35
- Radiography of Temporomandibular Joint 37
- Radiography of the Base of the Skull 41
- Radiography of the Zygomatic Arches 41
- Skull Projection 44

3. Tomography **59**

4. Computed Tomography **64**
- Advantages of Computed Tomography 68
- Disadvantages of CT scan 69

5. Sialography **77**
- Contrast Media 78
- Phases of Sialography 81
- Sialoendoscopy 88
- Angiography 89

6. Arthrography **91**
- Definition 91
- Contrast Agent 91
- Rationale 92
- Indications 93
- Contraindications 94
- Complications 94
- Technique 94
- Postoperative Course 96
- Double Contrast Arthrotomography 96

7. Arthroscopy **101**
- Instrumentation 102
- Illuminations 104
- Photography in Arthroscopy 105
- Technique of Arthroscopy 107
- Complications 109

8. Nuclear Medicine **110**
- Bone Scanning 115
- Salivary Gland Scanning 117
- Positron Emmission Tomography 118
- Radiochemical Stability and Storage 119

9. Temporomandibular Joint Imaging **120**
- Tomography 121
- Computed Tomography 122
- Scintigraphy 123
- Arthrography 124
- Magnetic Resonance Imaging 125

10. Digital Subtraction Radiography **126**
- Image Subtraction 128
- Applications 130

11. Radiovisiography **131**
- Components of Radiovisiography 131
- Applications of Radiovisiography 133

12. Implant Radiology **135**
- Presurgical Radiographic Evaluation 135
- Intraoral Imaging Using Electronic or CCD Imaging 136
- Tomographic Techniques 139
- Computed Tomography 139
- Intratreatment Evaluation 140
- Postsurgical Assessment 140

13. Teleradiology for Dentistry **141**
- Advances in Dental Image Acquisition 142
- Approaches to Telecomputing 143
- Historical Perspective 141

14. Photostimulable phosphor Radiography **148**
- Principles of Photostimulable Phosphor Radiography 148

15. Ultrasonic Imaging Technique (Ultrasound) **154**
- Principle 154
- Sonographic System and Technique 155
- Basic Rules of Scanning 158

16. Basic Principles of Magnetic Resonance Imaging **174**
- History 174

Index *193*

4 Computed Tomography

Computed tomography (CT) is a radiographic technique that blends the concepts of thin-layer radiography (tomography) with computer synthesis of the image (computed). X-ray beam attenuation measurements are made in a 360° circle around the part of the patients' body being scanned (Fig. 4.1). These measurements are then fed into a computer, which construct an image from them. The image then can be displayed on a video monitor, reformatted into other planes in two- or three-dimensions, adjusted for optimum viewing of bone or soft tissue, stored on magnetic tape or optical disk. Once the initial CT scan is performed, all of the subsequent image manipulation can be performed on a computer after the patient has left. But before reviewing the uses of CT in dentistry, clinicians need to understand the basic principles of CT image formation, including the terminology used to various aspects of the image.

The equipment needed to produce a CT scan consist of a donut-shaped scanning gantry, which contains the X-ray source, detectors and electronic measuring devices, a motorized table used to position the patient within the gantry, X-ray power supplies and controls a computer and viewing devices such as video monitors. Image can be filmed from the monitor by special slave imager cameras. Image data can be stored on magnetic tapes or disks (Fig. 4.2).

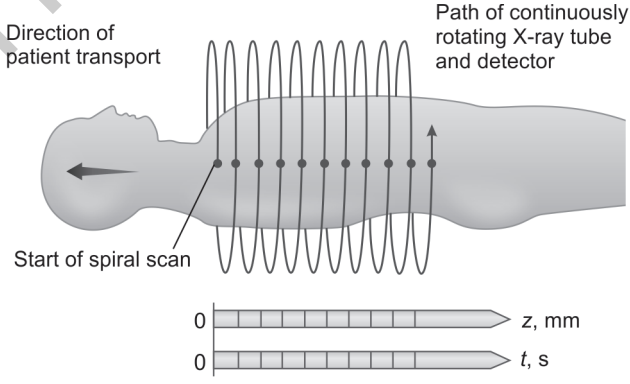

Fig. 4.1: Direction of patient moving and path of rotation of X-ray tube

JAYPEE BROTHERS

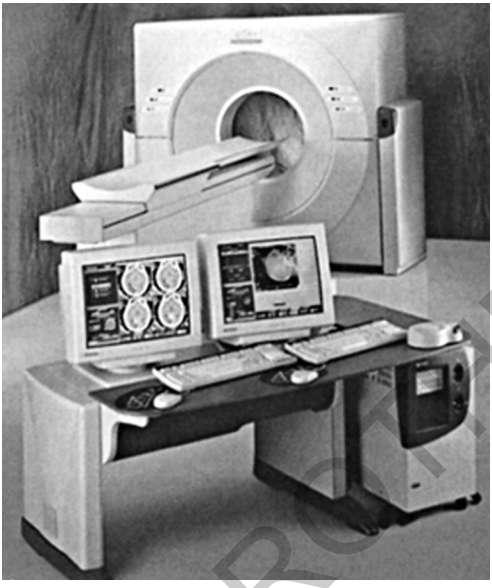

Fig. 4.2: Advance CT scanner

In the early days of CT scanning, the X-ray beam and detector moved linearly on either side of the patient's head, collecting the attenuation data that would eventually form the image. At the end of each linear scan, the gantry would rotate 1degree and the scan would be repeated, over and over again until 180° of rotation had occurred (Fig. 4.3).

Equipment improvements over the years include the use of multiple detectors and elimination of the translate phase of X-ray beam movement by using a fan-shaped beam to cover a larger area. In many modern machines today the detectors, either scintillation crystals or xenon gas, are arranged in either a rotating arc opposite the X-ray generator or a 360° array around the patient's body. During a scan, the X-ray tube rotates around the patient once for each slice, thus reducing the time of the entire scan from the original 30 minites or so to 2 second per slice (Fig. 4.4).

The X-ray beam attenuation data are collected in a grid pattern called a matrix. Each square in the matrix is made up a pixel, which represents the X-ray attenuation of a small finite volume of tissue. The area of tissue scanned and the size of the matrix determine the size of the pixel. Typical matrix sizes in CT are 256x256 or 512x512 pixels. The smaller the size of each individual pixel, the finer will be the overall image resolution (Fig. 4.5).

JAYPEE BROTHERS

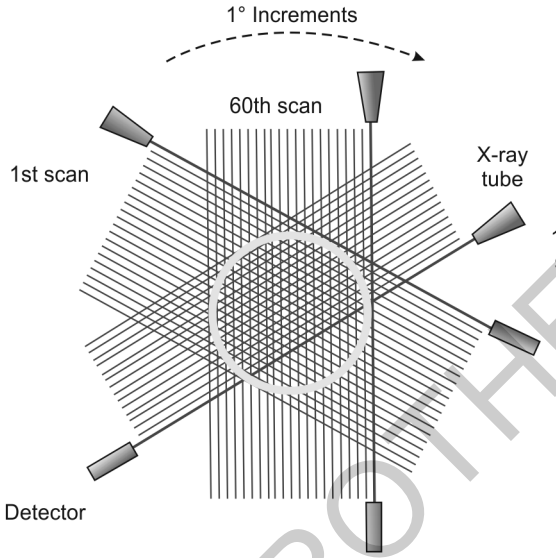

Fig. 4.3: First generation CT scanner. Beam translate through patient then rotate 1 degree for next scan

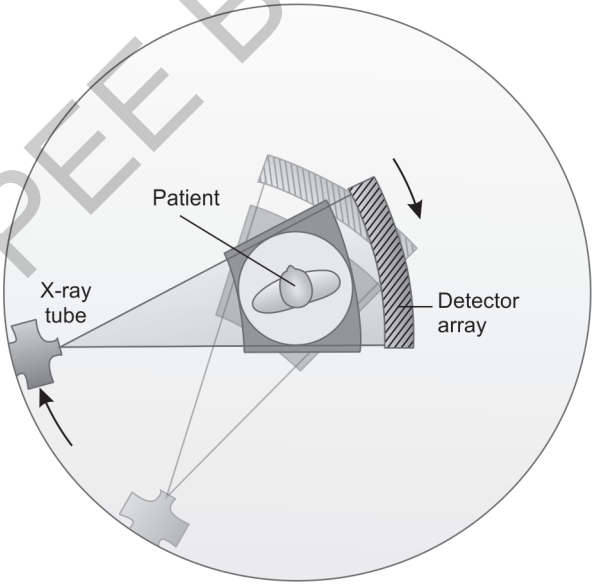

Fig. 4.4: Fan beam scanner. X-ray tube and detector array rotated around the patient ones for each scan slice

JAYPEE BROTHERS

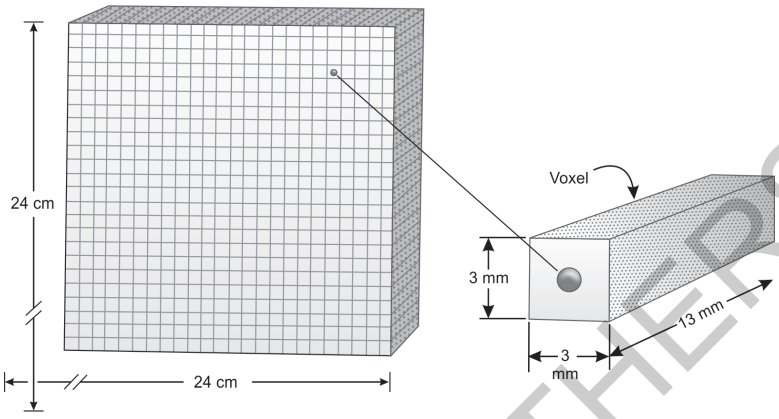

Fig. 4.5: Computer matrix, pixel and voxel

The CT image is made up a series of slice, each of which represents the anatomy of layer of soft tissue. The slice thickness is chosen by the operator. The finer detail can be obtained with thinner slice. In clinical practice, abdominal and other body CT imaging is performed at 10 mm thick slice; whereas head CT scans are usually made with 3 mm slice. Three-dimensional (3D) reformatting generally requires slice thickness of 1–1.5 mm. Thinner the slice, the more slice are needed to cover the tissue and the higher the radiation dose to the patient.

The data that are collected by the detectors are based on the attenuation of the X-ray beam by all the tissues in the path of the beam. If the intensity of the X-ray beam when it enters the patient is of a certain magnitude, say 10 unit, and the intensity when it hits the detector is only 4 units, then the tissue has absorbed 6 unit of X-ray. To produce an image from these data we need to know, how the attenuation was distributed throughout the tissue.

The attenuation measurement is apportioned equally among all the voxels in path of the X-ray beam. As data from 360° around the patient are available, one can repeat this back projection process for each detector. Each pixel in the resultant image is proportional to the sum of the rays projected through its corresponding voxels. To minimize artifacts, the computer dose some modification or filtering of the data to produce an image that is a close approximation of the attenuation characteristics of the object.

JAYPEE BROTHERS

Once all the calculations are performed, the results are in the form of a pixel map of attenuation number, each of which has a physical meaning. For example, water is set by convention to have a CT number of -0 (Hounsfield Unit) whereas fat has a CT number of –100; air –1000; various soft tissues, from about 12 to 80; and bone, from 80 to 1500.The CT Number for most biologic tissues are in the range of –50 to +100. These CT numbers must be transformed into an image. In dentomaxillofacial radiology CT number may range up to 3000 or more for enamel and hard tissue CT number for dense metal like titanium may be up to 7000 HU.

At the video monitor, one can select a window width, or the range of CT numbers that will be represented by pure white to pure black. One also can select a window level, or the CT number, that will correspond to the middle of the continuum from white to black. This is similar to adjusting the contrast and brightness controls on a television. To produce image variation, one simply alters window width and level on the monitor.

ADVANTAGES OF COMPUTED TOMOGRAPHY

Superimposition of Structures

When a conventional radiograph is made, all structures in the path of the X-ray beam will show up on the radiograph. This is not the problem for image of the axial skeleton, such as arms and legs, because the bone are thin and limb can be moved away from the rest of body, thus allowing the beam to be directed from multiple angles if needed. The head, however, has much more complicated anatomy, especially in the maxillofacial region and cranial base.

CT solves this problem of superimposition by allowing the clinician to view a series of thin sections, 1.5–10 mm thick depending on anatomic region, completely through the area of interest. Each layer can be visualized unobstructed by other anatomic features typically, all the layers are viewed sequentially so the clinician can determine the full extent of the pathology.

Image Acquisition in Cross-sectional or Other Planes

In conventional plain or tomographic radiography, the view desired to demonstrate the pathology, places the film behind the body part, and directs the beam through the structure of interest. Standard frontal and lateral images are not too difficult to obtain in most area of the body. Cross-sectional image, however, cannot be made many body regions because it is not possible to place the film and beam in the correct position. With CT, however axial or cross-sectional image are made routinely because

JAYPEE BROTHERS

of the arrangement of the detectors around the patient's body and the computer processing of the detector signals. Once the data are collected and processed, an operator sitting at a console can reformat the images into desired planes.

Soft Tissue Imaging

Plain radiographs demonstrate calcified structures very well but provide little information regarding soft tissues because of the screen systems to record X-ray attenuation differences of less than 2%.

CT imaging, however, is much more effective at separating subtle tissues contrast differences (as low as 0.5%) and thus can be used to differentiate not only soft tissue from bone, but also various types of soft tissue from each other.

When even more information is required concerning the soft tissues, an intravenous contrast agent can be used, which will accentuated the differences in tissue because the agent is concentrated in tissue with high vascularity.

Adjustment of Radiographic Contrast

Once a plain radiograph is made, there is little that can be done without a computer to alter the contrast or otherwise enhance the image. With CT, however, the operator at the console can adjust the contrast and brightness, similarly to adjusting the controls on a television set. In addition operator can emphasize the contrasts in bone (make a so-called "bone window") or in soft tissue (soft tissue window) depending on the nature of the pathology being evaluated.

Early Diagnosis

Disease processes may be detected at an earlier stage than is possible with other techniques and lesions may be detected in areas, which are difficult to assess with conventional imaging.

DISADVANTAGES OF CT SCAN

Most of the survey indicated that there is fairly wide ranges of radiation doses used in performing a CT scan of the head, with the majority of machines producing a mid-skull dose of between 34 mGy and 55 mGy (3.4–5.5 rad). This can be compared to a mean entrance exposure of 5.3 mGy (530 mrad) for posteroanterior or townes view skull radiograph.

JAYPEE BROTHERS

Although CT is effective in disease detection and localization, the characterization of lesions is more difficult, since many have similar attenuation characteristics. For example, it may not be possible to distinguish fibrotic masses from benign or malignant neoplasm on the basis of their CT appearance alone.

The other main disadvantages of CT are the capital cost of the equipment and the fact that it employs ionizing radiation. CT is used with care around radiosensitive structures such as the eye, or in children and young people, and only for over-riding indications in pregnant women.

Therapeutic Uses

A wide range of percutaneous therapeutic procedures are performed under CT control. The most common technique is CT guided biopsy; aspiration for diagnostic cytology or cutting needle biopsy for histological diagnosis can be undertaken in virtually any area of the body. CT-guided drainage can also be used in the treatment of most deep seated abscesses and other pathological fluid collection. Guided neurolysis, tumor lysis by alcohol injection, and laser therapy can also be under CT control.

Uses of Computed Tomography in Dentistry

A very important use of CT in dentistry is the evaluation of the presence and extent of clinically suspected pathology in the head and neck, including tumors, cysts and infections. When the lesion extended into the neck or the maxillary sinus or anywhere in soft tissues in the head, however, CT imaging is useful in determining the extent of the pathology. This type of information is invaluable for treatment planning.

Another major use of CT in dentistry is the determination of the location and displacement of facial fractures in maxillofacial region.

If the CT scan is performed with thin (1.5 mm) continuous slices, the data can be reformatted into a 3D image that can be rotated on the video screen to demonstrate the anatomy and pathology from all angles, which help in the reconstruction of jaws or joints. With some 3D software algorithms, individual bones and tumors can be disarticulated from the rest of the anatomy to increase visualization of specified structures.

CT is the best technique for imaging the TMJ. CT is also useful for evaluation of bony changes in patients with implants in the TMJ. There have been reports of foreign body granulomas associated with these implant causing perforation through the glenoid fossa into the middle cranial fossa.

JAYPEE BROTHERS

CT is the best technique for determine the presence of such a perforation. Another use for CT scanning in dentistry is for the evaluation of the jaws of patient for dental implants. After thin section axial CT scans are made through the mandible or maxilla, dedicated software programs are used to reformat the data into a panoramic type image as well as cross-sectional images perpendicular to a curved plane through the arch. In this way, buccal-lingual width of the jaw as well as the location of anatomical features such as the mandibular canal or maxillary sinus can be determined.

CT Guided Biopsy Techniques

Guided biopsy is used widely in many areas of the body, primarily as a method of obtaining material for histological or microbiological examination that would otherwise only be available by open operation. It is also used increasingly in situations where simple percutaneous fine-needle biopsy is possible, but cannot be relied upon to sample and the area of biopsy is not confirmed. Examples would include small or impalpable lesions, patchy involvement by a diffuse process, or circumstances where a complicated angulation of the biopsy device is required to reach the target lesion. The particular method used to perform such biopsy is dependent not only upon the clinical circumstances, but upon the preferences of the radiologist.

CT guided techniques enable a two-dimensional (2D) image with skin markers to be produced, from which the entry point, angulations, and depth of insertion of the biopsy device may be electronically planned. The main disadvantage is that, as the biopsy device is advanced toward the lesion, the procedure must be interrupted, and repeat scanning performed, at intervals which depend upon the anatomic complexity. Sophisticated software programmers are available to plan a 3D approach to lesions where direct access is hindered by bony or important structures.

Contraindications

1. Patients with allergy to dye or shellfish.
2. Patients those are pregnant.
3. Patients with unstable vital signs.
4. Patients that are very obese (over 300 lbs).
5. Patients with metal implants or pacemakers.
6. Since the Barium interferes the image, patients that have recently had imaging techniques that use barium.

JAYPEE BROTHERS

Cone-beam Computed Tomography

Role of cone-beam computed tomography (CBCT), for dental and maxillofacial diagnostic osseous tasks has been rapidly developed as an alternative to conventional CT for assessment of the maxillofacial pathology specially TMJ. CBCT results in images of CT-like quality, yet is made with less expensive equipment and components, shorter patient examination time, and much lower radiation dose than required for conventional CT.

CBCT provides images that can be reconstructed in planes parallel or perpendicular to the long axis of the condyle instead of the true anatomic coronal and sagittal planes. This results in high quality images of the bony components in all planes. Because the patients are positioned in a relatively natural head position, the TMJ positional relationships can be more accurately evaluated than in a CT examination, where the patient is supine position (Figs 4.6 and 4.7).

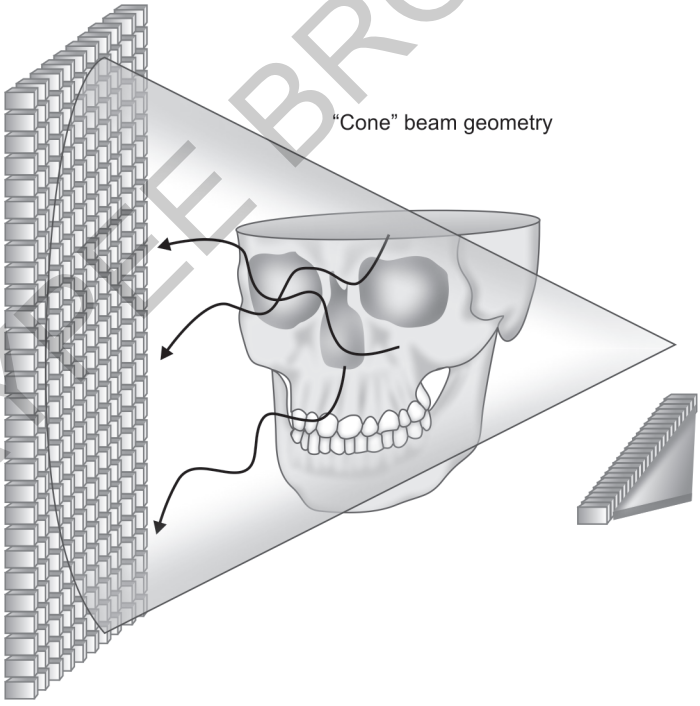

Fig. 4.6: Geometry of cone beam

JAYPEE BROTHERS

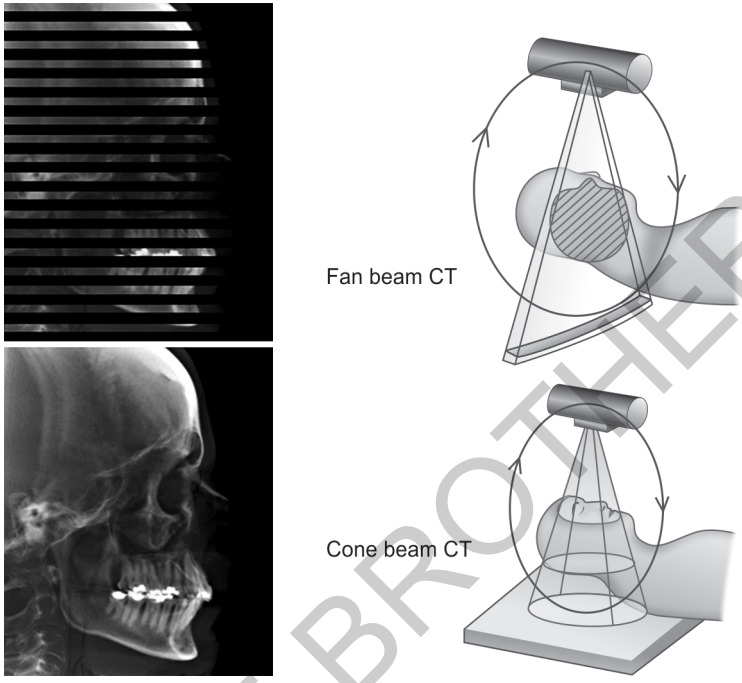

Fig. 4.7: Position of patients for fan beam CT and cone beam CT

CBCT Image Production

There are four components to CBCT image acquisition: (1) X-ray generation, (2) Image detection, (3) Image reconstruction, and (4) Image display. Cone-beam scanners are based on a cone-shaped beam of X-rays rotating around the object of interest giving a volume of data, using a 2D extended digital array as an area detector (Fig. 4.8).

The technique involves a single 360° scan in which the X-ray source and reciprocating area detector synchronously move around the patient's head, which is stabilized with a head holder. At certain degree intervals, single projection images, known as 'basis' images, are acquired. These are similar to lateral cephalometric radiographic images, each slightly offset from one another. This series of basis projection images is referred to as the projection data. Software programmes incorporating sophisticated algorithms, including back-filtered projection, are applied to these image data to generate a 3D volumetric dataset, and can be used to provide primary reconstruction images in three orthogonal planes (axial, sagittal and coronal), as well as three-dimensionally.

JAYPEE BROTHERS

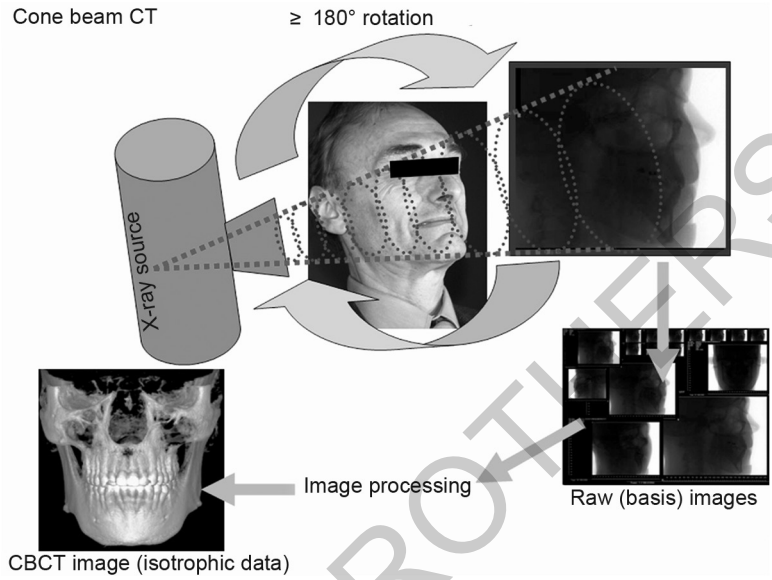

Fig. 4.8: Cone-beam CT – a cone-shaped X-ray beam rotates around a stationary patient with the image being detected by either a flat panel detector or an image intensifier

Clinical Applications of Cone-beam Imaging

Cone-beam CT is an exciting new addition to the imaging armamentarium which can be utilized to investigate the head and neck. It has the potential to transform practically all aspects of dental imaging. It offers an alternative to the need for complicated interpretative reasoning currently used, e.g. in parallax techniques for location of unerupted teeth. For ectopic, palatally placed maxillary canines parallax techniques have been shown to have a sensitivity of 69%, using a vertical technique, and 88% for horizontal parallax, but for buccally displaced canines these sensitivity figures both drop to 63%. In view of these figures and with the advent of cone-beam imaging, which gives so much more detail, perhaps the dose/benefit ratio needs to be reappraised. The 3D nature of the data obtained allows easy visualization of structures in the complex maxillofacial environment. The potential scope of clinical applications for cone-beam imaging is vast and currently has been shown to be particularly useful in the following dental and maxillofacial areas (Figs 4.9 and 4.10).

JAYPEE BROTHERS

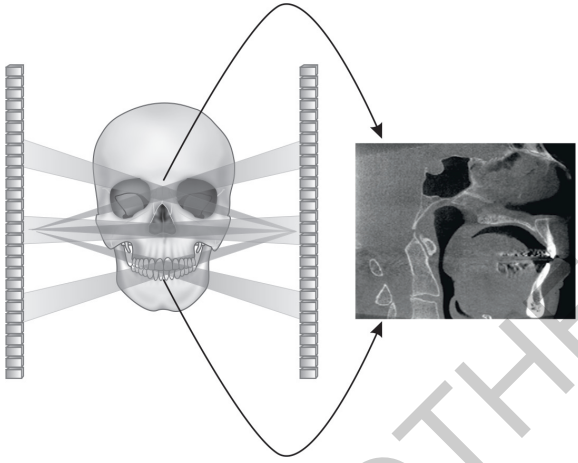

Fig. 4.9: Cone-beam application for dental and maxillofacial areas



Fig. 4.10: CBCT image of temporomandibular joint

- Investigation of various jaw pathology includes cysts, tumors and fibro-osseous lesions
- Investigation of the paranasal sinuses diseases
- Investigation of the bony components of the TMJ
- Pre- and post-implant assessment
- Orthodontic assessment, both dental development and skeletal base relationship
- Assessment of wisdom teeth, in particular their relationship to the inferior dental canal
- Evaluation of facial trauma.

JAYPEE BROTHERS

In addition, it provides the capability to visualize anything three-dimensionally; from anatomical tooth anomalies as, e.g. in endodontic cases, to the composition of periodontal defects.

Advantages of Cone-beam Imaging

- *Dose reduction*: Cone-beam CT indicates an effective radiation dose between 0.035 and 0.10 mSv, which is up to a 98% reduction compared to conventional CT.
- *X-ray beam limitation*: Reducing the size of the irradiated area by collimation of the primary X-ray beam to the area of interest minimizes the radiation dose.
- *Rapid scan times*: All the basis images are acquired in a single rotation; scan time is quick, varying between 10 and 40 seconds. Fast scan times also result in fewer artifacts.
- *Image accuracy*: The volumetric dataset comprises a 3-D block of smaller cuboid units, known as voxels, each representing a specific degree of X-ray absorption. The size of these voxels determines the resolution of the image ranging from 0.4 mm to as low as 0.125 mm.

Disadvantages of CBCT

- CBCT technology has limitations related to the "cone beam" projection geometry, detector sensitivity and contrast resolution
- These parameters create an inherent image "noise" that reduces image clarity
- Unable to record soft tissue contrast at the relatively low dosages applied for maxillofacial imaging
- Image degradation due to motion artifact
- Cone-beam technology based on an image intensifier may allow the periphery of the image to be distorted
- Radiological interpretation can be difficult when using a smaller field of view.

JAYPEE BROTHERS

ORAL & MAXILLOFACIAL IMAGING TECHNIQUES

Highlights of the Book

- The text of each chapter has been extensively updated
- Explanation is in simple language
- Excellent for deep knowledge, which will help undergraduate and postgraduate medical and dental students
- Book will also be helpful for students preparing for entrance examination
- Important features of this book include all imaging techniques for maxillofacial regions under single platform.



Shivlal M Rawlani BDS MDS (Oral Medicine and Radiology) is an eminent clinician and teacher with more than two decades of teaching experience in dentistry. He worked as Associate Professor, Department of Oral Medicine and Radiology, Sharad Pawar Dental College and Hospital, Sawangi (Meghe), Wardha, Maharashtra, India, a constitute unit of Datta Meghe Institute of Medical Sciences (Deemed University), Nagpur, Maharashtra, India for more than 17 years. He is working as Associate Professor and Head, Department of Dentistry, Mahatma Gandhi Institute of Medical Sciences/KHS, Sevagram (Wardha), Maharashtra, India. He is co-author for *Textbook of General Anatomy* by Dr Shobha S Rawlani. He has to his credit more than 35 national and international publications and research works. He has attended more than 40 workshops and conferences. He has numerous scientific paper presentations at various national/international conferences. He has worked with dedication in Late Shree Baba Amte Leprosy Foundation Center, Anandwan, Warora, Maharashtra, India for a period of 10 years. He had a privilege to attend an international workshop sponsored by World Health Organization (WHO) at Jaipur on 'Rational Use of Drugs in Community'. He had a privilege to attend a national conference organized by Health Ministry of India at New Delhi on Tobacco Cessation. He had a privilege of being invited twice as a guest speaker for National Continuing Medical Education (CME) organized by Medical and Dental Colleges. He had a privilege to work as Co-coordinator for Fluoride Mapping Program organized by Dental Council of India.



Shobha S Rawlani MBBS MS (Anatomy) is an eminent teacher with more than two decades of teaching experience. Currently, she is Professor and Head, Department of Anatomy, Dr Panjabrao Deshmukh Memorial Medical College, Amravati, Maharashtra, India. Earlier, she was Professor at Mahatma Gandhi Institute of Medical Sciences, Sevagram and Jawaharlal Nehru Medical College, Sawangi (Meghe), Wardha, Maharashtra, India, where she was credited with best teacher awards consecutively three years for her excellence in teaching. She had one textbook published by Jaypee Brothers Medical Publishers in her credit. She was credited by Dr Balasubramanian for E-teaching with MEdRC for Educational Technologies, Hyderabad, India. She has many publications in national and international journals. She had a privilege to undergo an international workshop sponsored by WHO on 'Rational Use of Drugs in Community'.

Shelving Recommendations
DENTISTRY, MEDICINE, RADIOLOGY

Available at all medical book stores or buy directly from Jaypee Brothers through online shopping at www.jaypeebrothers.com

JAYPEE BROTHERS
Medical Publishers (P) Ltd.
www.jaypeebrothers.com

ISBN 978-93-5090-846-4