# Management of CHILDHOOD BRONCHIAL ASTHMA

TU Sukumaran



2nd Edition

*Foreword*
H Paramesh

# CONTENTS

**Chapter 1. Diagnosis of Childhood Bronchial Asthma** **1**
*TU Sukumaran*
Mechanism of Bronchial Obstruction in Bronchial asthma 1
Prevalence of Bronchial Asthma 3
Diagnosis 3
Investigations 4
Differential Diagnosis 9

**Chapter 2. Pathophysiology of Bronchial Asthma** **12**
*TM Ananda Kesavan*

**Chapter 3. Pharmacotherapy of Bronchial Asthma** **21**
*TU Sukumaran*

**Chapter 4. Aerosol Therapy of Bronchial Asthma** **29**
*C Jayakumar*
Aerosol 29
Pressurized Metered Dose Inhalers (PMDI) 30
Accessory Devices: Spacer/Valve Holding Chamber 32
Dry Powder Inhalers 34
Nebulizers 35
Ultrasonic Nebulizers 36
Small Particle Aerosol Generator (SPAG) 36

Aerosol Therapy in Infants 36
Aerosolized Drugs in Pediatric Asthma, Inhaled Corticosteroids (ICS) 36
Aerosol Therapy in Asthma Situations 39
Aerosol Therapy in Non-asthmatic Situations 40

**Chapter 5. Management of Acute Bronchial Asthma 41**
*NK Subramanya*
Incidence, Prevalence, and Definitions 41
Distinguish Exacerbations from Poor Asthma Control 41
Initial Assessment of Acute Asthma 45
Classification of Severity 45
Management of Acute Asthma 45

**Chapter 6. Management of Persistent Bronchial Asthma 64**
*TU Sukumaran*
Prevalence of Bronchial Asthma 64
Classification of Persistent Bronchial Asthma 64
Aims of Treatment 65
Controllers of Persistent Asthma 65
Prognosis of Persistent Bronchial Asthma 68

**Chapter 7. Wheezing in Children 73**
*TU Sukumaran*
Causes of Recurrent or Persistent Wheezing in Children 74

**Chapter 8. Under Five Wheeze 82**
*TU Sukumaran*
What Causes Wheezing in Under Five Children 82

Management of Asthma and Wheezing in an Under Five Child 88

**Chapter 9. Asthma and Allergic Rhinosinusitis in Children 91**

*TU Sukumaran*

Epidemiology of Allergic Rhinitis in India 91
Clinical Features 91
Management 98

**Chapter 10. International Consensus on (ICON) Pediatric Asthma 101**

*TU Sukumaran*

Methodology 102
Asthma Definition 102
Diagnosis 105
Asthma Control 107
Asthma Management 108
Pharmacotherapy 109
Medications Used for Long-term Asthma Control 110
Steps of Controller Therapy 111
Immunotherapy 113
Asthma Exacerbation 114

**Chapter 11. Patients and Parents Education on Bronchial Asthma 116**

*P Jayasree*

Make them to Accept the Diagnosis 118
Understand Trigger Factors and wAvoid Them 121
Drug Therapy 123
Likely Prognosis in Individual Cases 125
Adjuvant Therapy 125
Psychosocial Aspects 126

**Chapter 12. Prognosis of Childhood Bronchial Asthma** **128**
*TU Sukumaran*
Family History of Atopy 128
Coexistence of Atopic Disease 128
Effect of Sex 128
Bronchiolitis in Infancy 129
Parental Smoking 129
Birth Weight and Prematurity 129
Age at Presentation 129
Severity and Frequency of Episodes 129
Lung Function Measurements 130

*Annexure* *133*
*Index* *141*

# Aerosol Therapy of Bronchial Asthma

chapter 4

C Jayakumar

Aerosol therapy has revolutionalized the treatment of so many conditions especially asthma management. This form of therapy is not new as ancient civilizations like Greek, Egyptian and Indians were practicing the same. Action at the target site, the lower respiratory tract, by-passing intestine, liver and heart is really advantageous in addition to the very low dose being used in micrograms, which is a definite boost to reduce the unwanted side effects of drugs. In case of β2 agonist like salbutamol, action of the drug is even more quicker than the intravenous preparations. Safety profile of inhaled form is excellent when compared to intravenous preparations.

## Aerosol

Aerosols are actually solid or liquid droplets suspended in gaseous environment. Therapeutic aerosols are suspended in air mainly due to the low density and small particle size that leads to low gravitational force. Droplets of varying size and densities are called as hetero disperse particles. If the particle size dispersion is low, i.e. <1.22 (GSD- geometric size distribution), it is known as mono disperse particle. Particles of size between 0.5–5 μm has more chance to get deposited in lower airways while those with size >5 μm, usually get impacted in the oropharynx and may be absorbed systemically.

### Aerosol Deposition

Aerosol deposition is dependent on the sedimentation velocities, impaction and diffusion characteristics. Inspiratory flow characteristics, also influence aerosol deposition. High inspiratory flow leads to oropharyngeal deposition of particles

JAYPEE BROTHERS

of even small size, while if on low inspiratory air flow the upper airways will be bypassed and get deposited by sedimentation. Gravitational sedimentation is the primary mechanism of drug deposition for particles <3 μm. Another important factor that determines drug deposition is duration of drug stay in the lower respiratory tract. Holding breath for 5–10 sec ensures more drug deposition. Aerosol deposition in children in the lower respiratory tract is defective due to the smaller airways and preferential nose breathing which further filters particles of size >3 μm. In addition to this small VC, FRC and fast respiratory rates further compromise drug deposition in children.

### Aerosol Delivery System

Generation of an aerosol is active process in MDI(metered dose inhalers) and in nebulizers, while it is active or passive in DPI(dry powder inhalers)where patients' effort generate aerosol. All aerosol devices generate heterodisperse aerosols with variable MMDA (mean mass aerodynamic diameter).

## Pressurized Metered Dose Inhalers (PMDI) (Fig. 4.1)

This is the most commonly used aerosol device. It is very compact, cost effective and handy. In addition to the daily use, it is a life saving device in an episode of moderate to severe asthma exacerbation. It has 3 parts, a reservoir with drug particles in suspension or in solution, a metered valve, which has a twin orifice expansion chamber , a nozzle that direct the spray to the mouthpiece and spray actuator. The propellant in modern MDI is HFA 134 a (hydroxy fluroalkane) instead of CFC12 and 114 (chloroflurocarbon), which is detrimental to the stratosphere due to ozone destruction. HFA generate smaller particles and it enhances the lower respiratory tract drug delivery efficiency (LDE).

### Advantages of MDI

Compactness, multidose convenience, freedom from bacterial contamination, dosage reproducibility and facility to combine drugs are some of the important advantages.

JAYPEE BROTHERS

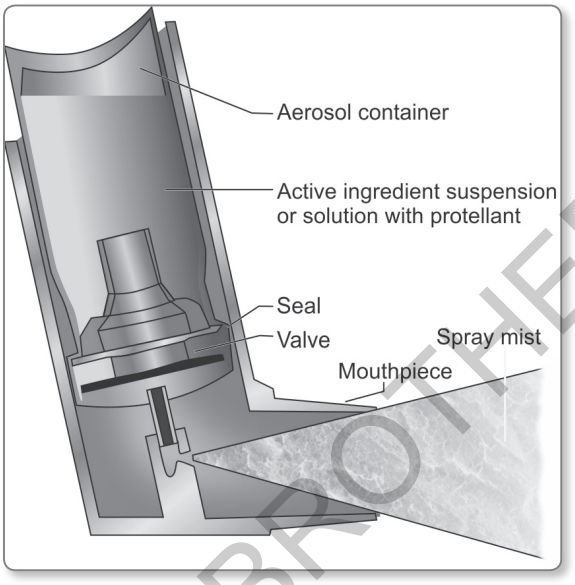


**Fig. 4.1:** Pressurized metered dose inhaler

## Disadvantages

Synchronization of actuation with inspiration is difficult in young children. This is not a major problem as it can be circumvented by VHC (valve holding chamber) or spacer. But the major disadvantage may be the ballistic effect, i.e. high velocity jet from the cannister to oropharynx at a speed of ~100 km/h, that leads to the deposition of larger high inertia droplets in the upper airways especially in larynx, oropharynx and mouth. This is not respired but may be absorbed systemically and also leads to local side efffects like dysphonia, oral candidiasis and bad taste in mouth. Cold freon effect is the sudden stoppage of breath due to the low temperature jet from the cannister, irrespective of the propellant, CFC or HFA. Cold freon effect leads to stopping of inspiration and swallowing of the drug which leads to poor efficacy and toxicity.

JAYPEE BROTHERS

## Accessory Devices: Spacer/Valve Holding Chamber

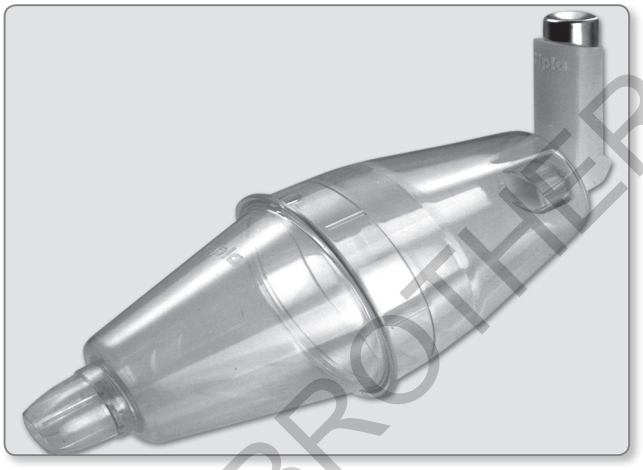

**Fig. 4.2:** Spacer attachment to metered-dose inhaler (MDI)

### Spacer with MDI and Baby Mask (Fig. 4.2 and 4.3)

The main advantage of VHC over spacer is the provision of a valve that prevent the entry of the air to the chamber as the child breathe out. VHC is superior in infants when somebody else actuate the cannister.

Even though these devices are initially used to circumvent synchronization actuation incoordination, they also prevent the deposition of high MMAD droplet into the respiratory tract by allowing them to settle in the devices. Curtailment of ballistic effect alone is helpful to decrease oropharyngeal deposition by 75% and improvement of lower respiratory tract drug delivery(LDE) of small droplets by 30–50%. Evaporation of the high density droplets also happens in the devices and furthermore prevent its entry into the LRT. The cold freon effect which is an integral effect with MDI is nulled in the devices. Small tidal volume 150 mL devices are superior to bulky 750 mL large volume spacers in all age groups in terms of LDE.

JAYPEE BROTHERS

Due to the fear of loss of static charges, daily cleansing of only the mouth tip and not the interior part of the body of the device is advised. Interior part (Fig. 4.3) of the body can be washed not before 1 month in 2 drops of detergent solution added water. Drip drying after rinsing again in plain water without using hand or cloth is preferable.

PMDI with spacer and Baby Mask is required in children less than 4 years (Fig. 4.4).

Autohaler is PMDI which needs no hand lung coordination.

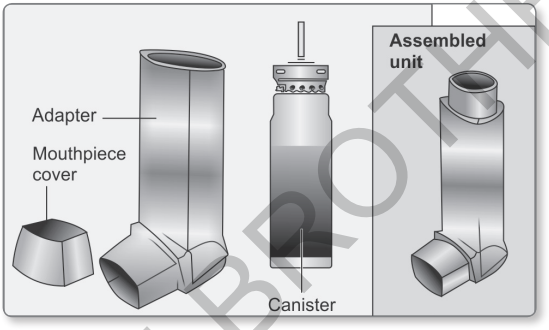


**Fig. 4.3:** Parts of inhailer



**Fig. 4.4:** Metered dose inhaler (MDI) with spacer and baby mask

JAYPEE BROTHERS

## Dry Powder Inhalers (Fig. 4.5)

Conventional DPIs (dry powderare passive devices as they require high pressure in the range of 30–60 L/min to deaggregate and generate an aerosol. But new generation passive devices are in the pipe line; those that do not require high inspiratory pressure. Lactose is the carrier used in majority of the DPIs.

### Advantage

- As aerosol is not created before inspiration, there is no chance for hand lung incoordination.
- There is no environmental hazards as in case of MDI where the propellant may be troublesome.
- There is no cold freon effect as in MDI.

### Disadvantage

Difficulty in generating an inspiratory pressure of 30–60L/mt in young children and in those with asthma exacerbation is the main handicap of DPI. Ballistic effect seen in MDI also occur in DPI due to high inspiratory pressure required to deaggregate the drug. So problems like candidiasis, dysphonia and bad taste seen with the use of MDI can occur in DPI also. High humidity can cause powder clumping. Lactose used as a dispersant in DPI may cause irritation and cough. As inhalation technique is low with MDI and spacer, correct advice to breathe fast to generate a high inspiratory flow is important when switching from MDI to DPI.

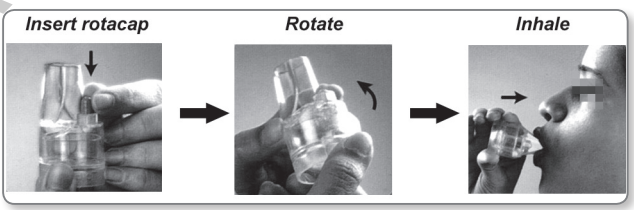


**Fig. 4.5:** Dry powder inhalers

JAYPEE BROTHERS

## Nebulizers

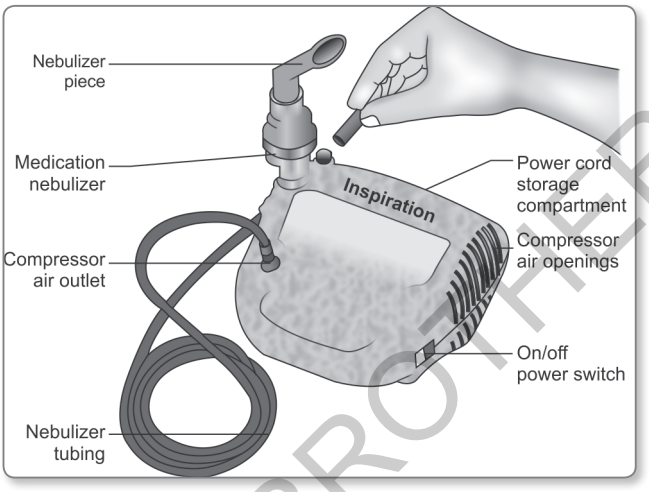


**Fig. 4.6:** Nebulizer

In nebulizers (Fig. 4.6) compressed gas, ultrasonic devices or pneumatic flow system generate aerosol. Gas is accelerated through a liquid filled capillary tube (by the Venturi effect based on Bernoulli's principle) and heterodisperse aerosol is created at the capillary end of the tube. Baffles in the nebulizer remove MMAD more than 10 µm, lung targetable MMAD of less than 3 µm are filtered. Due to the wastage of drug during the exhalation phase of tidal breathing and nebulizer dead volume, actual deposition in the LRT is around only 8–10% .

### Advantage

Major advantage is that patient can use tidal breathing, which is of great help in severe exacerbation. Synchronization of actuation inhalation is not needed in nebulizers. Large drugs that are not formulated for MDI and DPI can be used in nebulizers.

JAYPEE BROTHERS

### Disadvantage

High cost , need of power supply or gas in addition to being bulky is an important problem. Lack of standardization, chance for spread of infection can also occur with nebulizers.

## Ultrasonic Nebulizers

Here vibration of a vibrating piezo-electric crystal generate aerosol. Creation of large particle size in general, high cost and denaturation of peptide drugs if used as a nebulizing solution due to high temperature are important disadvantages.

## Small Particle Aerosol Generator (SPAG)

Small particle aerosol generator is a pneumatic flow system exclusively for the generation of aerosol with MMAD of less than 1.3 μm (for Ribavarin) in the management of RSV infection.

## Aerosol Therapy in Infants

Aerosol therapy in infants is a therapeutic challenge due to operational difficulties. Mouth piece cannot be used in children less than 2.5 years. Even a gap of 1cm between the face mask and face decrease the drug delivery by 30%. So tight fitting mask has to be ensured in infants. Crying further reduces lung deposition of the aerosol. Studies shows that lung deposition of the areosol is better with hood. Only negligible quantity of drug will be deposited if ill fitting mask is used or keeping the tube in front of nostril at a distance.

## Aerosolized Drugs in Pediatric Asthma, Inhaled Corticosteroids (ICS)

Beclomethasone,budesonide,fluticasone,flunisolide, triamcinolone, ciclesonide and mometasone are the usually used ICS. Inhaled cortocosteroids are used as a controller in the long-term management of asthma than as a reliever drug. As eosinophilic and lymphocytic infiltration is a constant feature

JAYPEE BROTHERS

of the mucosa of the airways in asthma, ICS has definite role in attenuating the inflammation. ICS cause reduction of eosinophils, mast cells, activated lymphocytes, macrophages, cytokines, eosinophilic cationic proteins and tryptase. In addition, ICS prevent the leakage of albumin, fibrinogen and other vascular proteins. ICS cause symptom reduction, improve the quality of life and positive changes in PEFR and spirometry. Clinical effects of these changes are reduction of ED visits and exacerbations. Major advantage of ICS is its negligible bioavailiability compared to systemic steroids.

Efficacy of inhaled corticosteroid is not the same in all children. Steroid response depend on the degree of airway inflammation, steroid insensitive pathways, structural changes if at all happened and predominantly neutrophilic inflammation. However, ICS is the best long-term asthma control agent compared to any other drugs. Addition of LABA (long acting β2 agonist) to ICS improve the outcome in asthma compared to LTRA (leukotriene receptor antagonists) or sustained release theophyllines (Theo-SR).

## Dosages of ICS

Low dose is 100–200 µg in case of beclomethasone, budesonide and fluticasone while it is 80–160 µg in case of ciclesonide. Medium dose is 200–400 µg except in the case of ciclesonide where it is 160–320 µg. Dose more than 400 µg is high dose except for ciclesonide in which it is more than 320 µg. Several studies has shown that low dose at the beginning of therapy is prudent to prevent exacerbations rather than starting a higher dose and tapering. In case of well-controlled asthma for 3 months, reduction of 25% of the steroid dose can be advised. In clinical practice, this can be implemented by using low dose preparations or once in a day schedule therapy. Addition of LABA to ICS, e.g. formoterol to budesonide or salmeterol to fluticasone helps to control symptoms without increasing the dose of ICS in children more than 4 years. Doubling the dose of ICS for acute exacerbation is not beneficial.

JAYPEE BROTHERS

## Precautions

Rinsing mouth after use and the using of VHC or spacer are good methods to decrease the oropharyngeal deposition and systemic absorption. Low and medium dose steroids are safe options in persistent asthma. But it may be prudent to monitor for growth velocity, dermal thinning, cataract formation, hypertension, diabetes, decreased bone mineral density and suppression of hypothalamic adrenal axis in those on high dose steroid for prolonged period. Age appropriate calcium supplementation and regular exercise are good nutritional advice in children. As asthma is a chronic inflammatory disorder exacerbation can occur when the child is off ICS.

## Relievers

β2 agonist are the drugs used in this category. As the name implies, they are life-saving medicines in severe or life threatening exacerbation. Salbutamol , levosalbutamol and terbutaline are the commonly used β2 agents. β2 adrenergic receptors are seen in airways of bronchial smooth muscles. Selective β2 agonists relax airway sooth muscle contraction and improve aeration of the smaller airways. Short acting β2 agonists are the most effective medication for relieving bronchospasm. Requirement of β2 agonist on a daily basis indicate inadequate control and the need to start ICS or step up its dosage. Exclusive use of β2 agonist alone chronically can cause deleterious effect in a subset of population with homozygous arg/arg16. All asthmatic children with night symptom belongs to the category of persistent asthma and requires ICS. Synthetically available β2 agonist are racemic mixture of R and S enantiomers. Due to stereo-selectivity of biological system, R enantiomers are more active than S form and S form may be harmful in vivo. Only quarter to half dosage is only required for L form compared to racemic form for comparable bronchodilator effect. Some studies shows more response for L form while some other trials do not show such good response over racemic forms.

Long-acting β2 agonist are formoterol with onset of action in 5 minutes (lower lipophilicity compared to salmeterol) and

JAYPEE BROTHERS

salmeterol with onset of action in 15 minutes. Duration of action for both drugs are more than 12 hours. LABA alone is not available and should be combined with ICS and should not be used alone.

In addition to the use as a reliever β2 agonists can be used shortly before exercise to prevent EIB (exercised induced bronchospasm). LABA –ICS combination to prevent EIB should be discouraged.

The dosage of salbutamol nebulizing solution is 0.03 mL/kg body weight.

### Anticholinergics

Ipratropium bromide is available as an aerosol in the management of acute exacerbation for short period. This drug is used along with β2 agonist. Ipratropium (20 µg/puff) 2 puffs 20 minutes interval for 3 doses is recommended in children less than 6 years while 4 puffs 20 minute interval 3 doses in children more than 6 years. Ipratropium is also available as a nebulizing solution for use in acute asthma.

The dosage of ipratropium nebulizing solution in children less than 1 year is 0.5 mL and more than 1 year is 1 mL.

## Aerosol Therapy in Asthma Situations

In intermittent asthma, β2 agonist can be used either as DPI or MDI (step 1). In mild persistent asthma β2 agonist is used, as and when required. But low dose ICS is used regularly and step down therapy is suggested after 3 months of well controlled state(step2). In children less than 4 years of age, medium dose ICS is regularly used for moderate and severe persistent asthma, till it is well controlled to step down with good response(step3). β2 agonist and short course of steroid is also used if the clinical situation warrants. In principle even moderate and severe persistent asthma have to be managed with medium dose of steroid in children less than 4 years of age. In uncontrolled situation medium dose ICS is combined with LABA(STEP 4), high dose ICS with LABA (step 5) and high dose ICS with LABA and regular oral steroid even in children less than 4 years of age (step 6).

JAYPEE BROTHERS

In moderate persistent asthma in more than 4 years of age, low dose ICS can be combined with LABA or medium dose is advised (step 3). In severe persistent asthma, medium dose is combined with LABA or sustained release theophyllines (Theo-SR) or monteleukast (LTRA) (step 4). Uncontrolled asthma more than 4 years who fail to respond with step 4 is advised to use high dose ICS with LABA or Theo-SR or LTRA (step 5). Step 6 is with high dose ICS /LABA or Theo-SR or LTRA and regular oral steroid.

In acute exacerbation except in life-threatening cases one puff of β2 agonist at 20 second interval 6 times is advised in children less than 6 years of age. In case of non-improvement at 20 and 40 minutes after the first quantum another two more quantums of 6 puffs 20 seconds interval can be given. Subsequently, the management depends on the clinical response. And β2 agonists are used always along with other medications used in asthma including ipratropium bromide. In children more than 6 years of age schedule is 12 puffs 20 seconds interval at 0, 20 and 40 minutes.

In life-threatening cases β2 agonist nebulization is the best form of therapy.

## Aerosol Therapy in Non-asthmatic Situations

A number of other drugs are nowadays used in situations like cystic fibrosis (N-acetyl cystein, tobramycin), pentamidine isothyanate in pneumocystis infection. In the years to come more and more drugs may become available in aerosolized form.

JAYPEE BROTHERS

# Management of CHILDHOOD BRONCHIAL ASTHMA

This book is the first comprehensive book on diagnosis and management of childhood asthma. This serves as a ready reckoner for academicians, practicing pediatricians and postgraduate students.



**TU Sukumaran** MD DCH MNAMS MPhil FIAP (Behavioral Medicine and Rehabilitation) is currently Professor, Department of Pediatrics at Pushpagiri Institute of Medical Sciences and Research Centre, Thiruvalla, Kerala, India. He was the former Professor of Pediatrics and Superintendent in Government Medical College, Kottayam, Kerala, India and also an alumnus of the same institution. He has over 34 years of clinical and teaching experience at both the undergraduate and postgraduate levels. He has published over 25 research papers in various national and international journals. He has presented a number of scientific deliberations in conferences at the state, national and international levels. His main interest is in pediatric pulmonology, especially in bronchial asthma, and he was instrumental in setting up an asthma clinic at Government Medical College, Kottayam, Kerala, India.

He was the principal investigator for the International Study on Asthma and Allergies in Children (ISAAC) at Kerala, India. The phases I and III of ISAAC were conducted by him at Ettumanoor Block area, Kottayam, Kerala, India. His first study on the Epidemiology of Bronchial Asthma, Allergic Rhinoconjunctivitis and Atopic Eczema in Children in Kerala was published in the Lancet (1998) and European Journal of Respiratory Diseases (1998). He was also the co-author of 'Asthma by Consensus', the National Guidelines for Management of Pediatric Bronchial Asthma. As a National Chairperson of the 'Respiratory Chapter' of the Indian Academy of Pediatrics (IAP), he has conducted more than 50 'Asthma Awareness' workshops (Help All Children Breathe) throughout the country.

Apart from being a brilliant academician, he is also an able administrator, a dynamic leader and a social worker. He has received a number of awards, including Fellowship of Indian Academy of Pediatrics (FIAP), Outstanding Leadership award conferred by the American Biographic Society, Lions Excellence award (2002), Lions International President's Appreciation award for being the Best Lions President (2003), and the Kamal Patra award of the Indian Junior Chamber. He was the State President of the IAP (2000), National Chairperson of Respiratory Chapter of IAP (2000–2002), and National Executive Member of IAP, nine times. He was the National Chairperson of Environment and Child Health Group (2003–2005) and National President of IAP (2011). He was also a member of the Postgraduate Board of Studies, Mahatma Gandhi University, Kottayam, Kerala, India. In recognition of his overall performance, he was awarded the 'Best Doctor Award' by the Government of Kerala in 2002.

Shelving Recommendation
**PEDIATRICS**

ISBN 978-93-5090-943-6

Available at all medical book stores
or buy directly from Jaypee Brothers through online shopping
at www.jaypeebrothers.com

JAYPEE BROTHERS
Medical Publishers (P) Ltd.
www.jaypeebrothers.com