ebrothers.com, for detailed information on ophthalmology books, visit our website www.jaypeebrothers.com, for detailed information on ophthalmology books

Subjects Covered

- Details of Diseases of Eye
- Nursing Procedures
- Mechanical Optics, Lenses and Lens Prescription
- Instruments and Equipment used in Eye
- Community Ophthalmology
- Drugs used in Optometry



TEXTBOOK FOR DIPLOMA IN OPTOMETRY

II YEAR

As per the Syllabus & Curriculum of DO

Highlights

- Concise yet comprehensive coverage of Diseases of Eye
- Special Emphasis on Mechanical Optics and Lens

Ajay Kumar Bhootra
Sumitra Agarwal

JAYPEE

Contents

1. Details of Diseases of Eye **1**

- Common Symptoms in Ophthalmology and Examination of Eye *1*
  - » Common Symptoms *1*
- Error of Refraction *6*
  - » Myopia *7*
  - » Hypermetropia *9*
  - » Astigmatism *9*
  - » Presbyopia *11*
- Diseases of Lacrimal Apparatus *12*
  - » Dry Eyes *12*
  - » Watering of Eyes *14*
  - » Lacrimal Tumors *15*
  - » Dacryocystitis *17*
- Diseases of Eyelids *18*
  - » Stye *18*
  - » Chalazion *20*
  - » Blepharitis *21*
  - » Ptosis *23*
  - » Lagophthalmos *25*
  - » Trichiasis *26*
  - » Blepharospasm *28*
  - » Entropion *29*
  - » Ectropion *30*
- Diseases of Conjunctiva *31*
  - » Conjunctivitis *31*
  - » Pterygium *34*
  - » Pinguecula *35*
  - » Red Eyes *36*
- Diseases of Cornea *37*
  - » Keratitis *37*
  - » Corneal Ulcer *39*
  - » Corneal Opacity *40*
  - » Keratoconus *41*
  - » Keratoplasty *43*
- Diseases of Sclera *44*
  - » Episcleritis *44*
  - » Scleritis *45*
  - » Staphyloma *46*
- Diseases of Uvea *47*
  - » Uveitis *47*
  - » Endophthalmitis *48*
  - » Panophthalmitis *48*
- Diseases of Lens *48*
  - » Cataract *48*
  - » Latest Techniques in Surgery of Cataract *50*
  - » Subluxation/Dislocation of Lens *51*
- Diseases of the Angle of Anterior Chamber *52*
  - » Glaucoma *52*
- Diseases of Vitreous *54*
  - » Vitreous Hemorrhage *54*
  - » Vitreous Opacities *56*
  - » Vitrectomy *57*
- Diseases of Retina *58*
  - » Diabetic and Hypertensive Retinopathy *58*
  - » Retinal Detachment *59*
  - » Central Serous Retinopathy *61*
  - » Cystoid Macular Edema *62*
  - » Retinoblastoma *62*
  - » Central Retinal Artery Occlusion *62*
  - » Central Retinal Vein Occlusion *63*
  - » Branch Retinal Artery Occlusion *63*
  - » Branch Retinal Vein Occlusion *63*
  - » Eale's Disease *63*
- Diseases of Optic Nerve *63*
  - » Optic Neuritis *63*
  - » Papilledema *64*
  - » Optic Atrophy *64*
- Destructive Surgeries of Eyeball *64*
  - » Enucleation *64*
  - » Evisceration *65*
  - » Orbital Exenteration *65*
- Strabismus *65*
  - » Paralytic Squint *65*
  - » Non-paralytic Squint *66*

- Diseases of Orbit *68*
  - » Proptosis *68*
  - » Orbital Fracture *68*
  - » Orbital Cellulitis *68*
- Community Ophthalmology *68*
  - » Blindness—Various Programs Related of Blindness *68*
- Miscellaneous *70*
  - » Vitamin A Deficiency *70*
  - » Impaired Tear Production *71*
  - » Low Vision Aids *71*
  - » First-aid in Ocular Injuries *73*
- Amblyopia *74*
- Color Blindness *74*

2. Nursing Procedures like Vital Recording, IM/IV/SC Injection, Oxygen Therapy, Nebulization and IV Infusion.....76

- Temperature Monitoring and Fever *76*
  - » Methods of Measurement *76*
  - » Normal Body Temperature *76*
- Pulse Monitoring *78*
  - » Normal Resting Heart Rate *78*
  - » Methods of Pulse Monitoring *78*
- Blood Pressure Monitoring *78*
  - » Normal Blood Pressure Range *79*
  - » Monitoring Blood Pressure at Home *79*
  - » Lifestyle Factors Affecting Blood Pressure *79*
- Respiration Monitoring *79*
  - » Respiratory Rate *80*
  - » Respiratory Depth *80*
  - » Respiratory Rhythm *80*
- Types of Injection Routes *81*
  - » Intramuscular *81*
  - » Subcutaneous *81*
  - » Intradermal *81*
  - » Intravenous *81*
  - » Intraosseous *81*
  - » Intraperitoneal *81*
  - » Intrathecal *82*
  - » Epidural *82*
  - » Intravenous Push *82*
- IM Injection *82*
  - » Location of Injection *82*
  - » Needle Size *82*
  - » Common Medications *82*
- IV Injection *83*
  - » Location of Injection *83*
  - » Needle and Catheter *83*
  - » Types of IV Injections *83*
- SC Injection *84*
  - » Location of Injection *84*
  - » Needle Size *84*
- Oxygen Therapy *84*
  - » Indications *85*
  - » Delivery Systems *85*
- Nebulization *86*
  - » Indications *86*
  - » Nebulizer Device *86*
- IV Infusion (also with Infusion Pump) *87*
  - » Indications for IV Infusion *87*
  - » IV Infusion Set-up *87*
- Care of Unconscious Patient *88*
  - » Common Reasons for Unconsciousness *88*

3. Mechanical Optics, Lenses and Lens Prescription.....91

- A Brief History of Ophthalmic Lenses and Spectacles *91*
  - » History of Ophthalmic Lenses *91*
  - » History of Spectacles *95*
- Terms used in Lens Workshop *97*
  - » Lens Blank *97*
  - » Lens Surfacing *97*
  - » Lens Prescription *97*
  - » Lens Diameter *97*
  - » Effective Diameter *97*
  - » Refraction Index *98*
  - » Abbe Number *98*
  - » Crown *98*
  - » CR-39 *98*
  - » Spherical *98*
  - » Cylinder *98*
  - » Axis *99*
  - » Meridian *99*
  - » Optical Cross *99*
  - » Near Add *100*
  - » Prism *100*
  - » Decentration *100*
  - » Base Curve *100*
  - » Ocular Curve *100*
  - » Cross Curve *100*
  - » Surface Power *101*
  - » Surface Curvature *101*

- » Corridor Length *101*
- » Free-Form Technology *101*
- » Lacquer *101*
- » Etching *101*
- » Generator *102*
- » Lens Surfacing *102*
- » Lens Polishing *102*
- » Chiller *102*
- » Varnish *102*
- » Edging *102*
- » Glazing *102*
- » Bevel *102*
- » Lens Grooving *103*
- » Emery *103*
- » Abrasives *103*
- » Chuck *103*
- » Newton's Ring *103*
- » Test Plate *103*
- » Button *103*
- » Depression Curve *103*
- » Cribbing *103*
- » Shanking *104*
- » Trepanning Tool *104*
- » Lens Form *104*
- » Lens Marking *104*
- » Surface Power *104*
- » Transverse Test *104*
- » Vertex *104*
- » C-Sizer *104*
- » Caliper *104*
- » Colmascope *104*
- » Crazing *105*
- » Edger Vomit *105*
- » Equithin *105*
- » Groover *105*
- » Hide-A-Bevel *105*
- » Hydro-Phobic *105*
- » Image Jump *105*
- » Impact Resistance *105*
- » Segment Inset *105*
- » Laminated *105*
- » Lap *105*
- » Lens Clock *105*
- » Lens Washer *106*
- » Safety Bevel *106*
- » Swarf *106*

- Ophthalmic Lens Material *106*
  - » Glass Lens *106*
  - » Resin Lens *106*
  - » Curve Variation Factor *111*
- Lens Standards *113*
  - » ISO 8980 *113*
  - » ISO 12870 *113*
  - » ISO 14889 *113*
  - » ISO 16034 *113*
  - » ISO 21987 *114*
  - » ANSI Z80.1 *114*
  - » EN 1836 *114*
  - » AS/NZS 1067 *114*
- Ophthalmic Lens Blank Manufacture—Glass and Plastic *116*
  - » Glass Lens Blank Manufacturing *116*
  - » Plastic Lens Blank Manufacturing *122*
- Ophthalmic Prescription Lens Making *124*
- Lens Defects *126*
  - » Optical Aberrations *126*
- Ophthalmic Lens Designs *130*
- Types of Ophthalmic Lenses *133*
  - » Aspheric Lens *133*
  - » High Index *133*
  - » Multifocal Lenses *134*
  - » Bifocal and Trifocal Lenses *134*
  - » Photochromatic Lenses *136*
  - » Polarized Lenses *136*
  - » Tinted Lenses *138*
  - » Protective Lenses *139*
- Spectacles Frames: History, Nomenclature, Terminology and Classification *141*
  - » History of Spectacle Frames *141*
  - » Nomenclature and Terminology *146*
  - » Classification *151*
- Types of Frame Material *154*
  - » Plastic Frames *155*
  - » Metal Frames *157*
- Types of Human Faces and Choice of Frames *159*
  - » Types of Human Faces *159*
- Cosmetic and Functional Dispensing of Spectacles *161*
  - » Dispensing of Spectacles *161*
  - » Functional Aspect Spectacle Dispensing *163*
  - » Cosmetic Aspect Spectacle Dispensing *166*

- Measurement for Ordering Spectacles: IPD and VD *171*
  - » Interpupillary Distance *171*
  - » Vertex Distance Measurement *173*
  - » Special Measurement for Fitting Special Types of Lenses *174*
  - » Special Dispensing Measurements *174*
- Fitting of Lenses in Various Types of Frames *181*
  - » Lens Insertion into Zyl Frames *181*
  - » Lens Insertion into Supra Frames *182*
  - » Lens Insertion into Rimless Frames *183*
  - » Lens Insertion into Full-rim Metal Frames *183*
- Spectacles Intolerance *184*
  - » Reasons for Intolerance *184*
- Special Types of Spectacles *186*
  - » Task Specific Spectacles *186*
- Dispensing of Prisms and Prismatic Effect of Lens *189*
  - » Prismatic Effect of Lens *189*
  - » Dispensing of Prisms *193*
- Contact Lenses *195*
- Low Vision Aids *205*
- Magnifications of Lenses *208*

4. Instruments and Equipment used in Eye 213

- Refractometer *213*
- Tonometer *215*
- Lensmetry *218*
- Ophthalmoscope *222*
- Operating Microscope *224*
- Slit Lamp Biomicroscope *225*
- Gonioscope *249*
- Pachymeter *250*
- Ishihara Chart *251*
- Perimeter *253*
- Exophthalmometer *254*
- A and B Scan *255*
  - » A-Scan (Amplitude Scan) *255*
  - » B-Scan (Brightness Scan) *256*
- ERG, EOG and VER *257*
  - » ERG (Electroretinogram) *257*
  - » EOG (Electrooculogram) *257*
  - » VER (Visual Evoked Response or Visual Evoked Potential) *257*
- Synoptophore *258*
- Other Orthoptic Instruments *259*
  - » Amblyoscopes *259*
  - » Haploscopes *259*
  - » Bagolini Striated Glasses *260*
  - » Maddox Rod *260*
  - » Worth 4-Dot Test *260*
- Keratometer *260*
  - » General Principle of Keratometer *260*

5. Community Ophthalmology 263

- National Programme for Control of Blindness *265*
  - » Objectives of National Programme for Control of Blindness *265*
  - » Plan of Action *267*
  - » Activities *269*
- Blindness: Causes and its Prevention *276*
  - » Causes of Blindness *276*
  - » Strategies to Address Eye Conditions to Avoid Vision Impairment *278*
- National Immunization Programme *279*
  - » Immunization *280*

6. Drugs used in Optometry 283

- Vascular Endothelial Growth Factor *283*

Index 285

4
CHAPTER

Instruments and Equipment used in Eye

Ajay Kumar Bhootra, Sumitra Agarwal

REFRACTOMETER

INTRODUCTION

A refractometer operates on the principle that the speed of light changes as it passes through different mediums. By measuring the angle at which light is bent, the refractive index of a substance can be determined. In the field of ophthalmology, a refractometer can also refer to an instrument used to measure the refractive error of the eye, providing information about the need for corrective lenses. We will discuss the refractometer that is used to measure the refractive error of the eyes. There are two types of refractometer—manual refractometer and auto refractometer.

Manual Refractometer

Manual refractometers are also known as phoropter. A manual refractor, or phoropter, requires the eye care professional to manually adjust lenses and settings based on the patient's responses. The phoropter is a key tool in the subjective refraction process. The patient provides feedback on the clarity of vision, and the eye care professional refines the prescription accordingly. The manual refractometer allows for a more customized and patient-specific approach. It takes into account not only objective measurements but also the individual's subjective experience and preferences. They are often used for a more detailed examination, especially when fine-tuning the prescription for factors like astigmatism or presbyopia.

Auto Refractometer

The advent of auto refractometer **(Fig. 4.1)** has changed the scenario of eye examination procedure. Today many practitioners have started relying more on auto refractometer for its speed and accuracy. Auto refractometer uses infrared light to determine the refractive status of the eye. Multiple readings are taken and the system computes the amount of refractive error on the basis of different reading taken and gives a print out of the results. The human observation and judgment involved during retinoscopy are being replaced by the logic function of the computer from the beginning till the endpoint, making the examiner more machines dependent rather than relying on his own judgment.

Auto refractometers have made the objective method of refraction automated, more repeatable, reproducible, faster, user friendly and also patient friendly. The examiner takes several measurements of a patient and each measurement is assigned with reliable co-efficient in the form a single digit number which helps the examiner judge the accuracy of the measurement.

JAYPEE BROTHERS



Fig. 4.1: Auto refractometer.

Calculation of Refractive Error

The refractive error is calculated by analyzing how the patient's eye influences the infrared rays. The following design principles are commonly used in most auto refractometer for analysis:

- Scheiner disc principle
- Retinoscopic principle
- Best focus principle
- Knife-edge principle
- Ray-deflection principle
- Image size principle

Most commercially auto refractometers that are available either uses Scheiner disc principle or retinoscope principle coupled with automated Badal Optometer. Each auto refractometer design is programmed to calculate the refractive error on the basis of an empirical calibration found by the clinical refraction of the patient extending over the instrument's dioptric range. Accommodative fluctuations may affect spherical more than cylinder power. The resolution of the cylinder power is the function of the automated refractor's measurement system and it is essentially fixed. The resolution of axis of cylinder power, however, depends on the magnitude of cylinder. As cylinder power increases, the ability to determine the cylinder axis is enhanced.

Auto refractometers are designed to calculate the refractive state of the eye at the plane of the cornea. The desired refraction at spectacle plane is calculated by vertex distance compensation range provided by the individual auto refractometer.

Clinical use of Auto Refractometer

The following steps in the given order may be followed for the effective use of auto refractometer:

- Make the patient sit comfortably on patient chair
- Ask him to put the chin on chin rest and head against forehead rest
- Instruct him to keep the head as still as possible and to keep the eyes open between blinks. Most auto refractometer automatically discard readings that is obstructed by blink.
- The patient should be relaxed and should be fixating at the target of the eye being tested even when the target is blurred.

JAYPEE BROTHERS

- The examiner, then aligns the instrument on the center of the entrance pupil with the help of joystick and actuate the button to capture the reading.
- Usually, auto refractometer takes a few seconds to capture the reading.
- It may be necessary for the examiner to track the eye with joystick after actuating the button in case the patient is unable to maintain fixation.
- When the examination is completed for one eye, similar process is repeated for the other eye.

Limitations of Objective Auto Refractometer

Although auto refractometers are very useful in most situations, there are certain situations where it fails to provide reliable measurement of refractive error. It must be remembered that results of objective auto refractometer should not be used as the final refractive correction without further confirmation. They should only be used to determine an initial objective refraction before the performance of subjective refraction. The practitioner must keep in mind the various limitations of auto refractometers and be wary of conditions that may produce invalid results, for example:

- Ametropia outside the range of auto refractometer.
- Auto refractometer often fails with small pupil below the minimum size.
- Often auto refractometer fails to control accommodation adequately.
- Anterior segment abnormalities resulting in opacities, cloudy ocular media, distorted pupil and irregular astigmatism caused by corneal irregularities such as keratoconus, corneal trauma and post refractive surgical corneas are the cases where the measurements are not reliable.
- Posterior segment abnormalities resulting in a poor fundus reflex, such as retinal detachment, staphyloma and retinopathies.
- Young patients with active accommodative system may produce more minus than revealed in retinoscopy or subjective refraction.
- Certain geriatric and pediatric patients are difficult to measure with auto refractometer because of inability to keep the head in position and the eyes fixated.
- During the automated objective refraction, the clinician will not be able to identify latent hypermetropia, pseudomyopia and various other accommodative abnormalities, nor will the clinician be able to reasonably estimate the extent to which the accommodative system has altered the spherical portion of the refractive end point.

TONOMETER

INTRODUCTION

A tonometer is a medical device used to measure intraocular pressure (IOP) inside the eye. Intraocular pressure is the pressure of the fluid in the eye, which can be important in the diagnosis and management of conditions such as glaucoma.

Intraocular pressure refers to the fluid pressure inside the eye. The eye is filled with a clear, watery fluid called aqueous humor, which is produced by the ciliary body and circulates through the anterior chamber before draining out of the eye through a network of channels called the trabecular meshwork. The balance between the production and drainage of this fluid helps maintain a stable intraocular pressure. Measuring intraocular pressure is an important aspect of eye examinations because abnormal pressure levels can be associated with certain eye conditions, most notably glaucoma. Glaucoma is a group of eye diseases characterized by damage to the optic nerve, often caused by increased intraocular pressure. Elevated intraocular

JAYPEE BROTHERS

pressure can put stress on the optic nerve, leading to progressive vision loss if not properly managed.

Normal intraocular pressure typically falls within a range of 10 to 21 millimeters of mercury (mm Hg). However, it is essential to recognize that normal pressure can vary among individuals, and a person with an intraocular pressure within the normal range can still develop glaucoma. Conversely, some individuals may have elevated intraocular pressure without developing glaucoma. Regular eye examinations, including the measurement of intraocular pressure, are crucial for monitoring eye health and detecting conditions such as glaucoma early on. Tonometers are used to measure intraocular pressure. There are different types of tonometers, and they can be classified into two main categories:

1. Contact tonometer
2. Non-contact tonometer

Goldmann Applanation Tonometer

The Goldmann applanation tonometer (GAT) **(Fig. 4.2)** is a widely used instrument for measuring IOP in the eye. It was developed by Swiss ophthalmologist Hans Goldmann.

Principle of Measurement

The Goldmann tonometer measures intraocular pressure by applanating (flattening) a small area of the cornea. The applanation area is a circle of approximately 3.06 mm in diameter. The tonometer is mounted on a slit lamp, a specialized microscope used in eye examinations.

Set Up

- Disinfect the forehead and chinrest of the slit lamp biomicroscope
- Disinfect the tonometer prism
- Adjust the papillary distance and focus the oculars.
- Set the magnification on low (10X) to medium (16X)
- Insert the cobalt blue filter
- Instil one drop of anesthetic drop

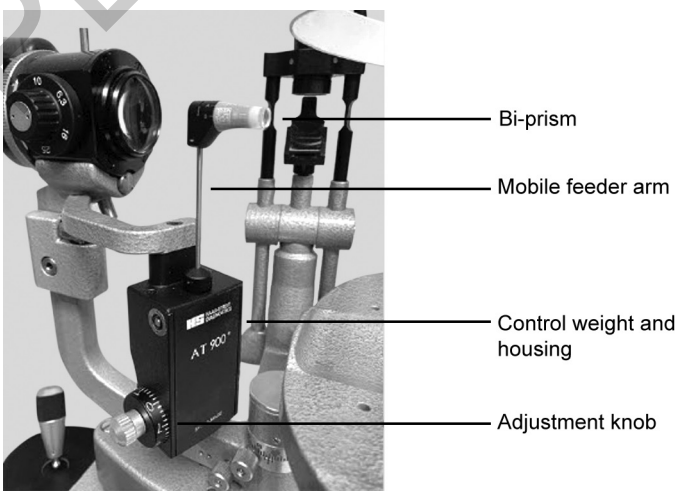

Fig. 4.2: Goldmann applanation tonometer.

JAYPEE BROTHERS

- Wet the fluorescein strip with a sterile saline and touch the moistened strip to the temporal bulbar or inferior palpebral conjunctiva.

Procedure

- Ask the patient to put the chin on chinrest, keep both the eyes open and look straight ahead.
- The practitioner should hold the upper lid firm against the patient's orbital rim.
- Now move the tonometer prism positioned slightly inferior to the visual axis toward the cornea. When the prism is 2–3 mm away from cornea, elevate the tonometer to align the prism with corneal apex and slowly touch the corneal apex.
- When the prism is in contact with cornea, look through the left ocular. This is because tonometer prism is properly aligned with left ocular only.
- As the prism touches the cornea a circular ring broken into two semi-circles as shown in **Figures 4.3A to C** will be visible.
- The adjustment knob is then rotated so as to achieve the image. Care should be taken to ensure that:
  - The size of the semi-circle is same.
  - The mire should not be very thick or thin. Usually, the thickness of 0.50 mm is considered ideal.
  - The edge should be sharp.
- As soon as you obtain the correct reading of the IOP, withdraw the tonometer prism from cornea.
- Wipe the prism tip with tissue to remove any fluorescein.

Limitations of Applanation System

The applanation results may be erroneous in the following cases:
- Irregular cornea
- High astigmatic cornea

Non-contact Tonometer

The non-contact tonometer (NCT) **(Fig. 4.4)** is a device that measures IOP without direct contact between the eye and the instrument. In this procedure, a quick puff of air is directed

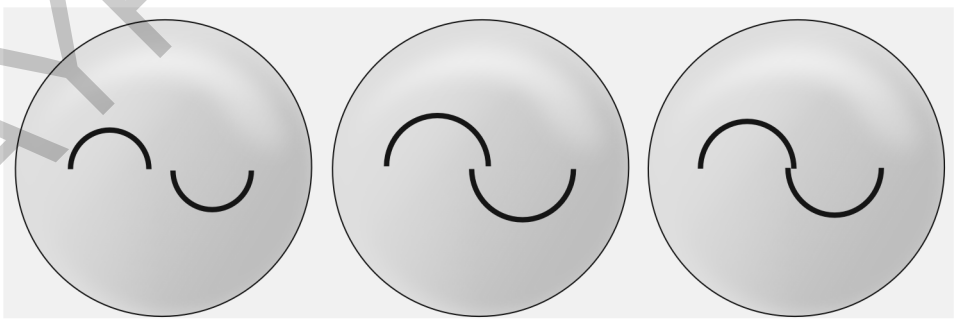

Figs. 4.3A to C: Applanation tonometry semi-circles viewed through the Goldmann prism.

JAYPEE BROTHERS



Fig. 4.4: Non-contact tonometer.

at the cornea, causing a slight deformation. The instrument then gauges the eye's resistance to this deformation to estimate intraocular pressure. Unlike contact tonometers, numbing drops are typically not used with the non-contact method. The procedure is swift and generally well-tolerated. However, it is crucial to communicate any concerns or discomfort to your eye care professional during the examination to ensure a comfortable experience.

LENSMETRY

INTRODUCTION

If the patient is already a user of spectacles, the lens power of the old spectacles should be found out using electronic equipment known as a lensmeter. The power of the old spectacle lens provides an important platform on which the refraction procedure can be initiated. Sometimes it is also used as an initial trial lens. It is an important factor to consider while making the decision to prescribe the new refractive correction. This is because a patient's visual system may have adapted to visual perception. A major change in prescription may alter the way the world is perceived, and therefore it has the potential to cause discomfort, visual disturbances, and even non-adaptation in some cases. It also helps to compare the refractive status of the patient's eyes during the counseling process. Hand neutralization is an alternate method that utilizes loose trial lenses of known power to find the power of unknown spectacle lenses.

There are two types of lensmeters: manual and auto lensmeters. While the manual lensmeter is operated by the user using some electrical or electronic devices involving human effort, skill, and knowledge of its operation, the automatic lensmeter works on its own without deliberation and connotes a predictable response. You simply put the lens on the lens aperture, center the lens well, and the exact lens power appears on the digital display screen. However, the use of a manual lensmeter requires training or a little experience. So we will limit our discussion to manual lensmeter only.

JAYPEE BROTHERS

Manual Lensmeter

Like auto lensmeter manual lensmeter **(Fig. 4.5)** is used to ascertain the spheric, cylinder and axis of an ophthalmic lens. It is also used to locate the optical center of the lens, determine the prism diopter in terms of base direction and the amount of prism present.

Targets

Reticle inside the lensmeter is used for focusing the instrument with the help of eyepiece and to determine the prism power. The reticle is a permanently etched series of concentric rings. It also contains orientation lines for each lens meridian and a protractor scale. Each ring denotes one prism diopter.

The target consists of two sets of illuminated lines perpendicular to one another for reading the power of the lens. These lines are focused by the power wheel. They are a little thicker and closely spaced lines. Target types vary with different brands and different models of lensmeter. Three common types of targets that are most commonly found in different brands of lensmeter are given in **Flowchart 4.1**.

Figure 4.6 shows the pictorial representation of different types of targets.

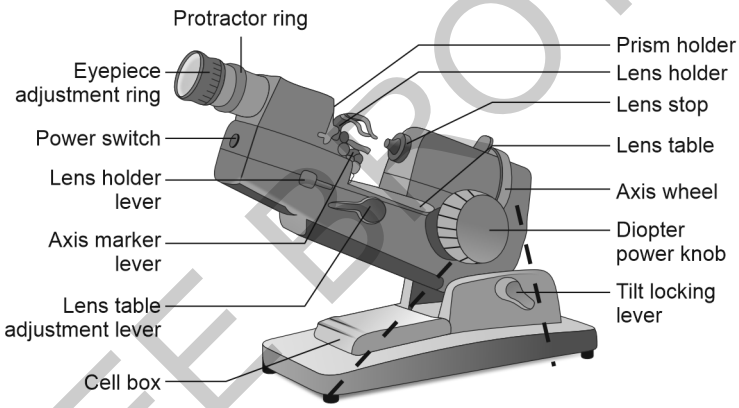

Fig. 4.5: Manual lensmeter.

Flowchart 4.1: Common types of targets found in lensmeter.

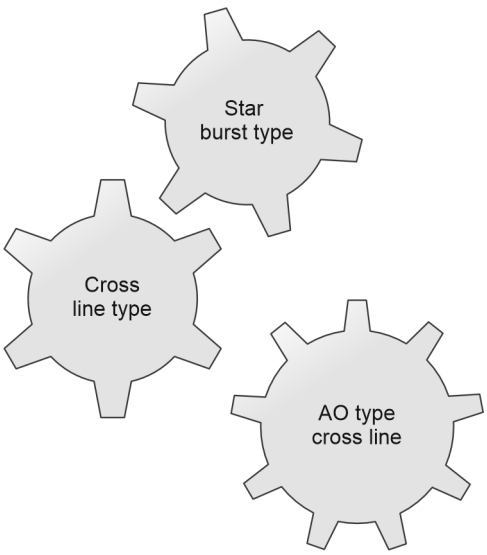

JAYPEE BROTHERS

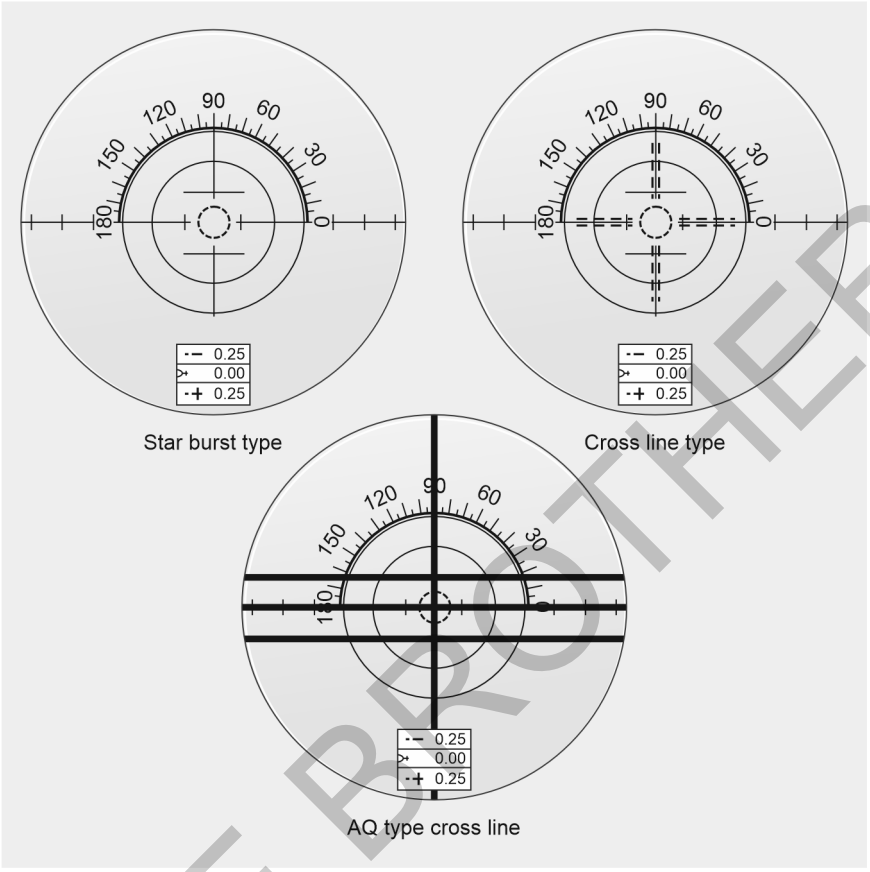

Fig. 4.6: Different types of targets.

Critical Factor

Lensmeter does not read lens prescription; it measures the powers of the lens in each meridian. In order to distinguish the sphere and cylinder lines for a particular lensmeter, with no lenses in place set the axis wheel at 180° and focus the lines. The vertically oriented lines are the sphere lines and the horizontally oriented lines are the cylinder lines. Keep the lensmeter in switch off condition and focus the reticle with the eyepiece. Then switch on the instrument. At this time, the power wheel should actually read zero diopter because there is only air in place. But often a small offset may be detected. Findings should be adjusted for any offset observed at this time.

Step-by-Step Procedure

- Sit right in front of the lensmeter and focus the black reticle with eyepiece. If it is not in focus, the reading will be erroneous. This is to be adjusted to accommodate the user's own refractive error **(Fig. 4.7)**.
- Now switch on the lensmeter **(Fig. 4.8)**, set the axis wheel on 180° and bring the reading scale to zero and see whether the illuminated targets and the black reticle both are sharply in focus.
- Place the back vertex (ocular side) of the **(Fig. 4.9)** lens against the stop of the lensmeter on the platform or if the lens is fitted in a spectacle frame place the spectacle lens so that, the temples of the frame is away from you. Make sure both front eye rims-right and left are in contact with the platform.

JAYPEE BROTHERS



Fig. 4.7: Adjusting the eye piece of the lensmeter.



Fig. 4.8: Switching on the lensmeter.

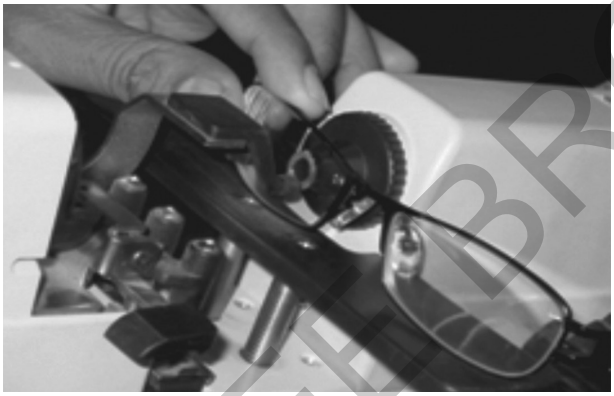

Fig. 4.9: Placing spectacle lens onto the platform.

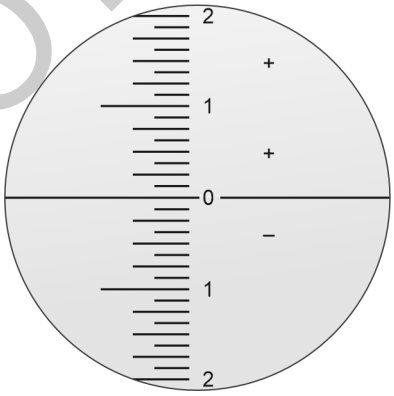

Fig. 4.10: Power reading scale inside the lensmeter.

- Center the lens by moving it on the platform so that the illuminated target is aligned to the centre of the reticle by moving the lens side to side or by moving platform up and down. If the lens also has prism correction, it will be difficult to align.
- Rotate the power wheel to focus the targets sharply and observe the two illuminated lines which are perpendicular to each other. If both the lines are in focus together, the lens is said to have only spherical power. The star burst ring is seen as a well-defined circular ring made of identifiable dots. The amount of spherical can be read on the power reading scale **(Fig. 4.10)**. Red letter shows minus power and the other shows plus power.
- If only one set of lines is in focus and the other is blurred, the lens is said to have cylindrical power. Since cylinder lens forms the line image, the circular star burst ring made of dots is seen as oblong shape image made of well-defined lines which are focused twice on two principal meridians.
- Cylinder power may either be plano-cylinder or sphero-cylinder. In case of plano-cylinder, the spherical line will be focused when the power scale reads zero and cylinder line at some number which will show the amount of cylinder present in the lens. In case of sphero-

JAYPEE BROTHERS

cylinder lens, the spherical line will be focused first at some number which will show the spherical component and then the cylinder line at some other number which will show the summation of spherical and cylinder. The difference between the two will give the cylinder element.

- Axis will be determined when the cylinder line is focused sharply. Orient the axis wheel of the lensmeter such that the cylinder lines are perfectly continuous together with the oblong illuminated image. Read the axis from the axis wheel. When the axis is not correctly positioned, the lines will appear "broken" or as if a "gates were left open."
- Axis can directly be determined by rotating the protractor ring. The black line when parallel to focused cylinder line will point at the axis on the protractor.
- Before removing the lens, put the dot on the optical center of the lens using the ink marking device. While doing so, make sure target should be right at the center of the reticle.
- To ascertain the power of the multifocal lenses, following additional steps are needed:
  - Read and record the power of the distance portion as above.
  - Turn the lens around so that the ocular surface faces you. The bifocal segment power is measured with temples pointing towards you (FVP) when the lenses are fitted in the spectacle frame.
  - Raise the platform up and check the power through the near segment area.
  - Compare the spherical power through the near segment to the spherical power through the distance portion. The difference between the two is taken as near add.
- If the lens is ground with prism, it may be impossible to center the target within the reticle. Mark a dot at the point where the patient's interpupillary distance coincides. Align this dot at the center of the reticle. Read the position of the star burst circular ring with respect to the number of circle in the reticle. Each circle denotes one diopter of prism **(Fig. 4.11)**.
- Record the reading so derived.

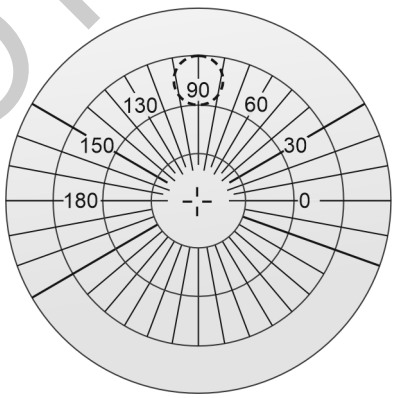

Fig. 4.11: Prism shifts the star burst circular ring position.

OPHTHALMOSCOPE

An ophthalmoscope is used to examine the interior structures of the eye. It allows for the visualization of the retina, optic disc, blood vessels, and other important structures. The key components of an ophthalmoscope include:

Light Source

Ophthalmoscopes have a built-in light source, usually an adjustable bulb or LED, to illuminate the interior of the eye.

Aperture

The aperture is an opening through which light passes. It can be adjusted to vary the size and shape of the light beam entering the eye.

JAYPEE BROTHERS

for detailed information on ophthalmology books, visit our website www.jaypeebrothers.com, for detailed information on ophthalmology books, visit our websi

TEXTBOOK FOR
DIPLOMA IN OPTOMETRY
II YEAR

Salient Features

- A compact book yet thorough companion for a holistic grasp of several crucial subjects in one go.
- From diseases of eyes to intricacies of nursing procedures, mechanical optics, lenses, and lens prescription—this book covers it all.
- Perfect for optometry students, optometry practitioners, or anyone keen on understanding eye health.

Ajay Kumar Bhootra B Optom DOS FAO FOAI FCLI ICLEP FIACLE (Australia) Diploma in Sportvision (UK), an Optometrist, Ocularist and Novelist, has been working with Himalaya Optical for more than 35 years. He has written several books in different categories. Two of his books have also been published in international languages. Besides, he has been the key person in developing training materials for the employees of his company Himalaya Optical. Currently, he is working on a nonfiction title as well as the third edition of two of his books on optometry. You can know more about Ajay at: www.ajaykrbhootra.com.

Sumitra Agarwal BHMS DMBS MD (Bio) M Optom B Optom DOS Diploma in Sportvision (UK), an Optometrist, Ocularist and a Homeopathic Practitioner, is the founder of Artificial Eye Company and Ted Speaker. She has been practicing as a low vision and rehabilitation specialist for more than 20 years and is very active on YouTube.

Printed in India

Available at all medical bookstores
or buy online at www.jaypeebrothers.com



JAYPEE BROTHERS
Medical Publishers (P) Ltd.
EMCA House, 23/23-B, Ansari Road,
Daryaganj, New Delhi - 110 002, INDIA
www.jaypeebrothers.com

Join us on facebook.com/JaypeeMedicalPublishers

Shelving Recommendation
OPHTHALMOLOGY

