formation on surgery books, visit our website www.jaypeebrothers.com, for detailed information on surgery books, visit our website www.jaypeebrothers.com

Essentials of Laparoscopic, Endoscopic & Robotic Surgery

Esophagus Stomach & Small Intestine

Colon, Rectum & Anal Canal

Liver, Biliary Tract, Pancreas & Spleen

Bariatrics & Metabolic Surgery

Abdominal Wall Hernia

formation on surgery books, visit our website www.jaypeebrothers.com, for detailed information on surgery books, visit our website www.jaypeebrothers.com

Essentials of Laparoscopic, Endoscopic & Robotic Surgery

Esophagus Stomach & Small Intestine

Colon, Rectum & Anal Canal

Liver, Biliary Tract, Pancreas & Spleen

Bariatrics & Metabolic Surgery

Abdominal Wall Hernia

Textbook of

Laparoscopic, Endoscopic and Robotic Surgery

Volume One

Har Prakash Garg
Ramesh Agarwalla
Makam Ramesh
Ajay Kumar
Kona Lakshmi

JAYPEE

Contents

Contributors ..... *xv*
Foreword ..... *xxv*
Preface ..... *xxvii*
Acknowledgments ..... *xxix*

Volume 1

Section I: Essentials in Laparoscopic, Endoscopic, and Robotic Surgery

Section Editor: *Makam Ramesh*

1. **History of Minimally Invasive Surgery** **3**
   CS Rajan
2. **Laparoscopic Instruments: Past, Present, and Future** **10**
   Uday Muddebihal, Zeel Sheth Agrawal
3. **Endovision System in Laparoscopic Surgery** **25**
   Makam Ramesh, Gaurang Ramesh
4. **Energy Sources in Laparoscopic Surgery** **34**
   Pawanindra Lal
5. **Surgical Robotic System** **46**
   Shailesh Gupta, Vivek Bindal, Har Prakash Garg
6. **Sterilization and Disinfection of Laparoscopic Instruments** **69**
   Ashwin Thangavelu
7. **Laparoscopic Training and Credentials** **72**
   Makam Ramesh
8. **Simulation and Simulator** **78**
   Sandeep Ganni
9. **The Basic Techniques in Laparoscopic Surgery** **86**
   Jugal B Agrawal, Nihar R Thakkar
10. **General Considerations in Laparoscopic and Thoracoscopic Surgery** **96**
    Pravin Hector John, John AC Thanakumar
11. **Anesthesia for Laparoscopic and Robotic Surgery** **106**
    Aparna Sinha

12. Peritoneal Access in Laparoscopy 120
Meenakshi Sharma

13. Laparoscopic Suturing and Knotting 125
Vijay Boargaonkar

14. Gastrointestinal Anastomosis 130
K Lakshman

15. Minimizing Minimal Access: NOS, Mini, and Less 147
Prashanth Rao, Sonali Bhagwat

16. Hand-assisted Laparoscopic Surgery 160
Deeksha Kapoor, Amanjeet Singh

Section II: Surgery of the Esophagus, Stomach, and Small Intestine

Section Editor: *Har Prakash Garg*
Co-Editor: *Vivek Bindal*

17. Anatomical and Physiological Tests for Functions of Esophagus 169
Sudeep Khanna

18. Laparoscopic Repair of Hiatus Hernia with Fundoplication 183
Pradeep Chowbey, Abhimanyu Dewan, Vikas Yadav

19. Robotic Hiatus Hernia Repair with Fundoplication 192
Vivek Bindal, Dhananjay Pandey

20. Endoscopic Management of Gastroesophageal Reflux Disease 199
Rakesh Kalapala, Neeraj Singla

21. Laparoscopic Paraesophageal Hernia Repair 208
Tarun Mittal, Anmol Ahuja

22. Robotic Approach to Paraesophageal Hernias 218
Mukund Khetan, Aniruddha J Yadav

23. Minimal Access Surgery for Disorders of the Diaphragm 226
Devashree P Sane, Gaurav V Kulkarni, Giridhar Reddy, Deepraj Bhandarkar

24. Laparoscopic Heller Myotomy 246
Kona Lakshmi, KSSN Aditya Kalyan

25. Robotic Heller Myotomy 251
Ashish Vashistha, Anand Kishore

26. Peroral Endoscopic Myotomy 259
Anudeep Katrevula, Pradev Inavolu, Mohan Ramchandani

27. Redo Surgery at the Hiatus 266
Vishakha Kalikar, Roy Patankar

28. Endoscopic Management of Barrett's Esophagus 273
Praveen Sharma, Shivangi Negi, Shivam Khare, Anil Arora

29. Endoscopic Management of Esophageal and Gastric Submucosal Tumors 280
Zaheer Nabi, D Nageshwar Reddy

30. Role of Endoscopy in the Management of Early Esophageal and Gastric Cancer 288
Rohan Yewale, Jay Bapaye, Amol Bapaye

31. Minimally Invasive Esophagectomy 306
Shailesh Puntambekar, Mohd Azharuddin A Attar, Nikesh M Gandhi, Mangesh Panse, Mihir Chitale, Sravya Inampudi, Aishwarya Puntambekar

32. Robotic Esophagectomy 344
Assif Iqbal Sayed, Shivendra Singh

33. Endoscopic Palliation of Advanced Esophageal Cancer 357
Neha Berry, Ajay Kumar

34. Laparoscopy in Benign Gastric Diseases 367
Bharat Kumar Nara, TV Aditya Chowdary

35. Laparoscopic Surgery for Benign Tumors of Stomach 371
Pravin Hector John, John AC Thanakumar

36. Laparoscopic Gastrectomy 377
Syed Asif, Shivendra Singh

37. Robotic-assisted Radical Gastrectomy 387
Deepak Govil, Vivek Tandon

38. Laparoscopic Enterostomies 397
Ravishankara Bhat, Amit Bansal

39. Laparoscopic Management of Intra-abdominal Infection 406
Subhash Aggarwal

40. Exploratory Laparoscopy and Lysis of Adhesions 416
Satish Midha, Geet Midha

41. Exploratory and Therapeutic Laparoscopy in Trauma 425
Subhash Aggarwal

42. Laparoscopic Management of Small Bowel Diseases 434
Deep Goel, Anoop Singh

43. Surgical Endoscopy in Gastrointestinal Disease: Present and Future 444
Sundaram Easwaramoorthy

44. Pediatric Gastrointestinal Endoscopic Intervention 466
Karunesh Kumar, Smita Malhotra, Anupam Sibal

45. Video-assisted Thoracic Surgery for General Surgeons 472
Sabyasachi Bal, Pallavi Purwar, Rohit Kumar Rathi, Haritha Joseph

46. Minimally Invasive Surgery of the Mediastinum 483
Rohit Kumar Rathi, Sabyasachi Bal

47. Video-assisted Thoracoscopic Surgery for Benign Esophageal Disorders 492
Sabyasachi Bal

Section III: Surgery of Colon, Rectum, and Anal Canal

Section Editor: *Makam Ramesh*
Co-Editor: *Sanjiv P Haribhakti*

48. Diagnostic and Therapeutic Colonoscopy 501
Ravindra BS, Balaji G, Sunil Kasturi

49. Radiology of Colorectal Malignancy 508
Pradeep Srinivasan, Eesha Pradeep

50. Role of Pathologist in Colorectal Cancer Surgery 526
Prasenjit Das, Lalita Mehra

51. Laparoscopic Surgery for Diseases of Appendix 544
Sadashivayya Soppimath, Ramakrishna HK

52. Laparoscopic and Robotic Surgery for Benign Colorectal Diseases 570
Avadh Patel, Sanjiv P Haribhakti

53. Laparoscopic/Robotic Resection for Carcinoma Colon 587
Prakash Kurumboor, Vipin IS

54. Laparoscopic Surgery for Rectal Cancer 597
Sandeep Nayak, Ameenuddin Khan, Srivishnu Saravanabavan, Chirag Bhirud

55. Laparoscopic Rectopexy 617
Ajaiya SK

56. Anastomotic Leaks in Colorectal Surgery 622
Ashok Kumar KV, SV Kapil Kishore

57. Role and Rationale of Hyperthermic Intraperitoneal Chemotherapy (HIPEC) in Various Malignancies 628
Ruquaya Mir, Vikram Pratap Singh

58. Functions of Anorectal Component 635
Gaurang Ramesh

59. Transanal Minimally Invasive Surgery and Transanal Total Mesorectal Excision 642
Isaac Seow-En, Ming-Yin Shen, William Tzu-Liang Chen

60. Management of Hemorrhoids 650
KP Haridas

61. Update on Anorectal Fistulas 667
Parvez Sheikh, Atef J Baakza

62. Management of Anorectal Incontinence 682
Ashok Kumar, Kailash Chand Kurdia

Volume 2

Section IV: Surgery of the Liver, Biliary Tract, Pancreas, and Spleen

Section Editor: *Har Prakash Garg*

63. Liver Anatomy in Relation to Liver Transplants and Resections 701
Pradeep Krishna, Ravindra Nidoni, Mahesh Gopashetty

64. Laparoscopic Ultrasound 706
Pravin Hector John, John AC Thanakumar

65. Laparoscopic Surgery for Benign Lesions of Liver 711
Ruchir Bhavsar, Kona Lakshmi

66. Laparoscopic Liver Resection for Cancers 728
Neerav Goyal, Arun Venuthurimilli, Varun Madaan, Pradeep Kumar, Rigved Gupta

67. Robotic Resection for Liver Cancer 755
S Sudhindran

68. Laparoscopic Living Donor Hepatectomy 763
Ravishankar K Diddapur

69. Robotic Donor Hepatectomy 787
Christi Titus, Binoj ST, Krishnanuuni Nair, Shweta Mallick, S Sudhindran

70. Interventional Treatment of Unresectable Hepatocellular Carcinoma 794
Harsh Rastogi

71. Cholelithiasis, Chronic and Acute Cholecystitis 815
Har Prakash Garg

72. Laparoscopic and Robotic Cholecystectomy 856
Pradeep Chowbey, Abhimanyu Dewan, Ismail Khan

73. Bile Duct Injuries 875
Makam Ramesh

74. Robotic Surgery for Extrahepatic Biliary Duct 898
Somashekhar SP, Elroy Saldanha, Kush Shah

75. Endoscopic Management of Difficult Bile Duct Stones 919
Arup Choudhury, Jayanta Samanta

76. Endoscopic Management of Pain, Benign Biliary Stricture, and Gastric Outlet Obstruction 929
Zaheer Nabi, D Nageshwar Reddy

77. Laparoscopic Surgery for Pancreatic Pseudocyst 941
Baiju Senadhipan

78. Robotic Cystogastrostomy 946
Arun Prasad

79. Endoscopic Management in the Setting of Acute Pancreatitis 948
Reethesh SR, Nitesh Agrawal, Ajay Kumar

80. Laparoscopic Management of Necrotizing Pancreatitis 962
Shreeyash Modak, GV Rao

81. Minimally Invasive Distal Pancreatectomy and Pancreaticoduodenectomy 967
Srikanth Gadiyaram, Murugappan Nachiappan

82. Robotic Whipple's 979
Brij B Agarwal, Neeraj Dhamija, Vasu Vashishtha

83. Pancreatobiliary Malignancies, Endoscopic Palliative Treatment of Obstructive Jaundice 988
Rajesh Puri, Prakruti Shah

84. Minimally Invasive Splenectomy 994
Brij B Agarwal, Neeraj Dhamija, Vasu Vashishtha

85. Minimally Invasive Approaches to the Thyroid and Parathyroid Glands 1001
Vikram Sharannapa, Anjali Mishra, Saroj Kanta Mishra

86. Robotic Adrenalectomy 1012
Anshuman Agarwal

87. Laparoscopic Adrenalectomy 1024
Pinky Thapar, Abhay Dalvi, Sameer Rege, Aparna Deshpande

Section V: Bariatrics and Metabolic Surgery

Section Editor: *Kona Lakshmi*
Co-Editor: *KSSN Aditya Kalyan*

88. Evolution of Bariatric and Metabolic Surgery 1033
Ramraj Nanak

89. Developing a Successful Bariatric Surgical Unit 1037
Mahendra Narwaria, Shivanshu Misra

90. Pathophysiology of Obesity 1048
Kona Lakshmi, Shivanshu Misra, Viswanath Tadikamalla

91. Preoperative Workup for Bariatric Surgery 1061
Vandana Soni, Tanveer Ahmed Yatoo

92. Anesthesia for Bariatric Surgery 1068
S Mohan, Ravi Raya

93. Selection of an Appropriate Procedure in Management of Morbid Obesity 1076
Kona Lakshmi

94. A Comparison of Surgical and Nonsurgical Management of Obesity 1082
Nidhi Khandelwal, Jaydeep H Palep

95. Surgery for Morbid Obesity and Metabolic Syndromes 1086
Raj Palaniappan

96. Sleeve Gastrectomy 1105
Ramen Goel

97. Roux-En-Y Gastric Bypass 1109
Pradeep Chowbey

98. Biliopancreatic Diversion 1132
Daniel Cottam, Amit Surve

99. The MGB History, Guidelines, and Understanding "The MGB Paradox" 1136
Rutledge, Ali Esparham, Murat Üstun, Yasser Hamza

100. Impact of Bariatric Surgery on Comorbidities 1145
Sandeep Agarwal, Arun Kumar, Vitish Singla

101. Common Complications after Bariatric Surgery 1161
Sunil K Sharma, Ashley Faulk, Prajyot Pardeshi, Smita Sharma

102. Nutritional Management Before and After the Bariatric Surgery 1175
Aparna Govil Bhasker, Mariam Lakdawala, Jan Willem Greve, Muffazal Lakdawala

103. Experimental and Novel Procedures for Obesity 1186
Abhishek Katakwar, Nitin Jagtap, Rakesh Kalapala, GV Rao

104. Robotic Bariatric Surgery 1198
Vivek Bindal

Section VI: Surgery of the Abdominal Wall Hernia

Section Editor: *Ramesh Agarwalla*
Co-Editors: *Pramod Shinde, Ramesh Punjani*

105. History of Groin Hernia Surgery 1217
Pravin Hector John, John AC Thanakumar

106. Understanding Mesh and Fixation Device 1221
Jignesh Gandhi, Aarsh Gajjar, Harsh Sheth

107. Anatomical Consideration in Groin Hernia Surgery 1235
Vinal T More

108. Open Inguinal Hernia Surgery 1240
Girish D Bakhshi, Aishwarya Dutt

109. Laparoscopic Inguinal Hernia Transabdominal Preperitoneal Repair 1247
Pankaj Khandelwal, Minal A Patil, Kinjal Satra

110. Total Extraperitoneal Repair of Inguinal Hernia 1253
Manish Baijal, Abhimanyu Dewan, Ismail Khan

111. Newer Procedures in Groin Hernia Surgery 1261
Mukund Khetan

112. Management of Giant Groin Hernias 1267
Prasad Bhukebag, Roy Patankar, Avinash Supe

113. Recurrent Inguinal Hernias 1273
Ganesh Shenoy K

114. Rare Groin Hernias Management 1287
Vijay Boargaonkar

115. Complications in Inguinal Hernia Repair 1290
Vikas Singhal

116. Hernia Surge World Guidelines 1297
Ganesh Shenoy K, Ramesh Agarwalla

117. Ventral Hernia Surgery: Historical Overview 1316
Pravin Hector John, John AC Thanakumar

118. Anatomical Considerations in Abdominal Wall Hernia 1319
Sharad Sharma

119. Understanding CT Scan in Abdominal Wall Hernia 1326
Ankit Mishra

120. European Hernia Society Guidelines for Abdominal Wall Hernias 1335
Aparna Deshpande, Payal Salvi

121. Open Ventral Hernia Repair 1353
Sayandev Dasgupta

122. IPOM/IPOM Plus Pros and Cons 1360
Ramesh Agarwalla, Sanjay Sonar

123. Laparoscopic Trans Abdominal Retro Muscular (TARM) Repair for Ventral Hernia. 1381
Ashwin A Masurkar

124. Newer Procedures in Ventral Hernia Repair—SCOLA 1400
T Shiva Kumar

125. Evolution of eTEP Hernia Repair 1405
Rajesh Srivastava

126. Preoperative Optimization in Giant Abdominal Wall Hernias 1407
Sean B Orenstein, Vahagn C Nikolian

127. Abdominal Wall Reconstruction: A Peek in for the General Surgeon 1417
Sarfaraz J Baig, Hema Tadimari

128. Anterior Component Separation for Ventral Hernia Repair 1427
Pramod Shinde

129. Posterior Component Separation: Transverse Abdominis Release 1434
Ramesh Punjani

130. Atypical Sited Hernias 1441
Meenakshi Sharma

131. Mesh Infection and Its Management 1447
Tanveer Ahmad Yatoo, Vikas Yadav, Anil Sharma

132. Complications of Abdominal Wall Hernia Surgery 1453
Ramesh Punjani

133. Robotic Abdominal Wall Hernia Surgery 1459
Dhanedra Pandey, Vivek Bindal

134. Loss of Domain Hernia 1476
Ramesh Punjani

135. Management of Open Abdomen 1482
Deeksha Kapoor

Index 1487

3

CHAPTER

Endovision System in Laparoscopic Surgery

Makam Ramesh, Gaurang Ramesh

JAYPEE BROTHERS

INTRODUCTION

The advent of laparoscopic surgery marked a new era in the world of minimally invasive surgical procedures. Endovision systems, an integral part of these procedures, play a pivotal role in providing the surgeon with a detailed internal view of the patient's body, thereby maximizing precision and ensuring safer surgical outcomes.

The term "Endovision" is derived from "Endo", meaning "inside", and "Vision", denoting the ability to see. Thus, endovision systems offer a real-time visual representation of the internal structures of the patient's body. They use a combination of high-resolution cameras, powerful light sources, and state-of-the-art display systems to create an amplified visual field for the surgeon.

The use of endovision systems has revolutionized laparoscopic surgery by allowing surgeons to perform complex procedures through tiny incisions with enhanced precision, reduced blood loss, and minimized postoperative pain and recovery time. The visual information provided by these systems has expanded the possibilities of minimally invasive surgery, leading to improved patient outcomes.

The journey toward contemporary endovision systems traces back to the 1980s. Semm (1983) was one of the pioneers who laid the foundation for endoscopic intra-abdominal surgery. Over the years, these systems have evolved from single-chip cameras to three-chip systems and now to the high-definition (HD), 4K and three-dimensional (3D) cameras. The evolution of light sources, monitors, and other accessories has also contributed to the overall enhancement of the endovision system.

Today, endovision systems form an indispensable part of laparoscopic surgery, and the continuous technological advancements in this field promise an exciting future.

COMPONENTS OF AN ENDOVISION SYSTEM

The endovision system is a composite of several key components, each contributing to the overall performance and efficacy of the system. The primary components of an endovision system are the camera systems, light sources, monitors or display systems, and insufflators. Each of these plays a unique role in the visualization process during laparoscopic surgery.

Camera Systems

The camera system **(Fig. 1)** forms a vital link in the imaging chain of laparoscopic surgery, transforming the optical image formed by the laparoscope into an electronic signal that can be displayed on a monitor. Modern endoscopic camera systems vary greatly in their complexity and capabilities, ranging from single-chip cameras to advanced three-chip and stereoscopic systems.



Fig. 1: Camera system.

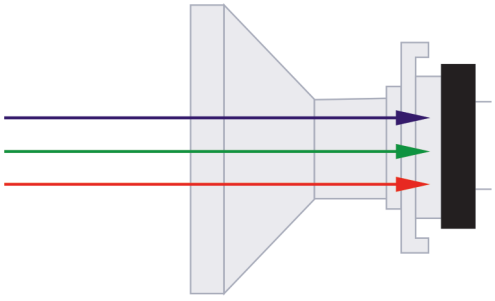

Fig. 2: Single-chip cameras.

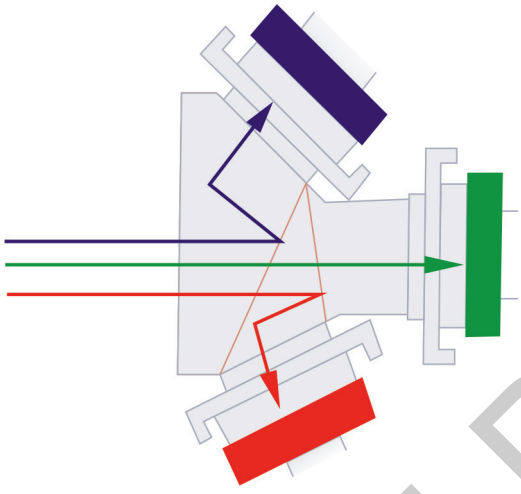

Fig. 3: Three-chip cameras.

Single-chip Cameras (Fig. 2)

Single-chip cameras are the simplest type of endoscopic camera system. These cameras use a single charge-coupled device (CCD) or complementary metal-oxide-semiconductor (CMOS) sensor to capture all color information (red, green, and blue) at each pixel site. While these cameras are relatively inexpensive and compact, they suffer from lower color resolution compared to three-chip cameras.

Three-chip Cameras (Fig. 3)

Three-chip cameras, also known as 3-CCD cameras, are the standard in many modern laparoscopic surgeries due to their superior image quality. In these cameras, the incoming light is split into three primary colors using a beam splitter. Each color is then captured by a separate CCD or CMOS sensor, greatly enhancing the camera's color resolution and image quality. However, these cameras are more complex and expensive than single-chip systems.

High-definition Cameras

High-definition cameras offer higher resolution images compared to standard-definition (SD) systems. HD cameras capture images at a resolution of at least 1280 × 720 pixels (720p), with some systems offering 1920 × 1080 pixels (1080p) or even higher. The increased resolution allows for more detail to be seen, improving the surgeon's ability to identify and differentiate anatomical structures.

Three-dimensional or Stereoscopic Cameras

Stereoscopic cameras consist of two slightly spaced cameras that capture two distinct images, mimicking the binocular vision of the human eye. These images can be processed to create a 3D effect, giving the surgeon a sense of depth in the surgical field. This can potentially improve surgical precision and reduce operation times. However, these systems require specialized monitors and glasses, and some surgeons may experience discomfort or disorientation when using 3D visualization.

Fluorescence Imaging

Near-infrared (NIR) fluorescence imaging (FI) has recently experienced rapid expansion on a global scale. It aims for the best patient outcome during diagnostics or surgery. In minimally invasive surgery, it is used in numerous applications such as vessel or visceral perfusion assessment, visualization of bile duct anatomy, or (sentinel) lymph node mapping. *Enhanced visualization:* One significant advancement has been the improvement in camera sensitivity, allowing for better visualization of fluorescent signals. This enhancement has resulted in clearer and more detailed images during laparoscopic procedures. Surgeons can now detect even subtle fluorescent signals, which is particularly useful for identifying small lesions or tumors that might be challenging to spot with traditional imaging techniques. The availability of new and improved fluorescent dyes has expanded the applications of FI in laparoscopy. These dyes can specifically target certain tissues or biomarkers, making it easier to differentiate between healthy and diseased tissues during surgery. For instance, certain dyes can highlight blood vessels, lymph nodes, or cancer cells, aiding surgeons in making more precise decisions during the procedure. Surgeons can now observe the fluorescence during the surgery itself, rather than relying solely on preoperative imaging. This real-time feedback allows for more accurate and immediate decision-making during the procedure, potentially reducing the risk of complications

JAYPEE BROTHERS

and improving patient outcomes. Some systems now incorporate multispectral imaging capabilities, enabling the simultaneous capture of multiple fluorescent signals with different wavelengths. This advancement allows for a more comprehensive assessment of tissues, providing surgeons with a more comprehensive understanding of the surgical site. Laparoscopic FI has started to integrate with surgical navigation systems. Surgeons can overlay the fluorescence data onto the live camera feed or 3D models of the patient's anatomy, providing valuable guidance during complex procedures. However, it is crucial to stay up to date with the latest developments in the field to fully grasp the current state of this technology.

Laparoscopes

A laparoscope is an essential component of the imaging chain in laparoscopic surgery, acting as the gateway between the internal surgical field and the external imaging system. It is a long, thin instrument equipped with a light channel that introduces light into the body cavity and a lens system that captures the reflected light and forms an image.

There are primarily two types of laparoscopes: Rigid and flexible. The former is more commonly used in laparoscopic surgery.

Rigid Laparoscopes

Rigid laparoscopes **(Fig. 4)** consist of a series of rod lenses developed by Harold H. Hopkins, which provide high image quality and light transmission. They are generally 5–10 mm in diameter and 33–45 cm in length, with variations designed for specific procedures **(Fig. 5A)**.

Rigid laparoscopes can further be classified based on the angle of view they provide, such as 0°, 30°, 45°, and 70° **(Fig. 5B)**. The most commonly used is the 30° telescope as it provides better vision of all the different sides of organs, especially for pelvic surgeries. 45° telescopes are preferred in some advanced surgeries such as bariatric procedures.



Fig. 4: Rigid laparoscopes.

GRIN Lenses

GRIN stands for gradient-index lenses. These lenses are a type of optical component that exhibits a gradual change in refractive index along its length. Unlike conventional lenses with a uniform refractive index, GRIN lenses can bend light in a way that allows them to focus or collimate light without the need for complex optical systems. GRIN lenses in laparoscopic imaging systems are used to enhance image quality and reduce the size of the endoscopic equipment.

Flexible Laparoscopes

Flexible laparoscopes **(Fig. 6)**, though less common in laparoscopic surgery, offer the advantage of adjustability, providing the ability to navigate through tortuous pathways. They utilize a fiber-optic bundle for image transmission, which may result in lesser image quality compared to rigid scopes.

Light Sources

The light source **(Fig. 7)** is the beginning of the imaging chain in laparoscopic surgery, and it critically influences the quality of the endoscopic image. The light produced by the source is carried by a fiber-optic cable into the patient's body cavity through the laparoscope, illuminating the surgical field. The four common types of light sources used in endoscopy include halogen, xenon, metal halide, and light-emitting diode (LED), with each having distinct properties.

Benefits of an effective light source include the following:

- *Tissue differentiation:* Proper illumination helps distinguish tissues and structures, enabling surgeons to identify anatomical landmarks and make precise surgical maneuvers.
- *Depth perception:* Adequate lighting aids in creating a 3D perception, allowing surgeons to assess the depth and spatial relationships within the surgical field accurately.
- *Color rendering:* Accurate color representation is essential for the identification of blood vessels, tissues, and pathologies during laparoscopic procedures.

JAYPEE BROTHERS

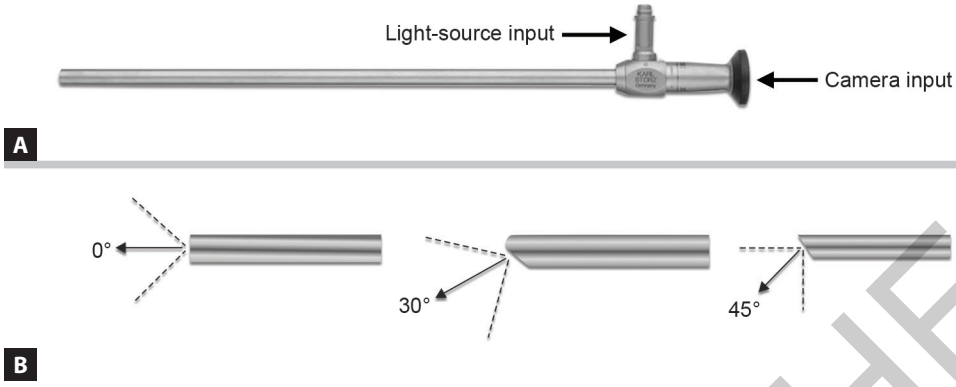

Figs. 5A and B: (A) Rigid laparoscopes structure; (B) 0°, 30°, and 45° angles of view provided by rigid laparoscopes.



Fig. 6: Flexible laparoscopes.



Fig. 7: Light source.

JAYPEE BROTHERS

Halogen

Halogen light sources were commonly used in early laparoscopic surgeries. They produce a yellowish light with a color temperature of around 3,200 Kelvin. While halogen lamps are inexpensive, they generate significant heat and have a relatively short life span of about 50 hours. Moreover, their lower color temperature renders a less natural color representation compared to xenon or LED light sources.

Xenon

Xenon light sources are popular in modern laparoscopic surgeries due to their high-intensity, white light output that closely mimics daylight, with a color temperature ranging from 5,700 to 6,000 Kelvin. They offer excellent color rendition, allowing for better tissue differentiation. However, xenon lamps have a higher cost and typically last between 500 and 1,000 hours.

Metal Halide

Metal halide lamps provide a light output that is similar to xenon, with a slightly lower color temperature (about 5,400 Kelvin). They offer a longer life span (around 1,500 hours) than xenon lamps but can require more time to reach their full light output after being switched on.

Light-emitting Diode

Light-emitting diode light sources are increasingly being used due to their numerous advantages. LEDs have a long life span, often up to 50,000 hours, greatly reducing

the need for replacements. They also consume less energy, produce less heat, and reach their full light output almost instantaneously. LED light sources provide a color temperature similar to daylight (around 6,000 Kelvin), rendering excellent color reproduction.

In addition to visible light, infrared (IR) light can also be utilized in some laparoscopic applications. For instance, NIR FI uses IR light to illuminate specific dyes injected into the patient, allowing for the visual differentiation of structures like lymph nodes or bile ducts.

Monitors and Display Systems

Monitors and display systems act as the interface between the camera and the surgeon. They display the images captured by the camera, allowing the surgeon to view and interpret the ongoing procedure. The quality of the monitor significantly impacts the clarity and detail of the visual information. Modern display systems often feature HD or 4K monitors and may also support 3D visualization.

Monitors commonly used in laparoscopy are as follows:

- *Standard definition monitors:* These are the most basic monitors used in laparoscopy. They have a lower resolution and may not provide the same level of image clarity as higher-definition options.
- *High-definition monitors:* HD monitors offer better image quality with higher resolution, allowing for more detailed visualization during laparoscopic procedures.
- *Three-dimensional monitors*: 3D monitors provide a 3D view of the surgical field, which can enhance depth perception and spatial awareness during laparoscopic surgeries.
- *4K Ultra-HD (UHD) monitors:* These monitors offer even higher resolution than HD monitors, providing incredibly sharp and clear images, which can be beneficial for complex surgical procedures.
- *Touchscreen monitors:* Some laparoscopic systems come with touchscreen monitors, allowing surgeons to control certain aspects of the equipment directly on the screen.

Aspect Ratio

Aspect ratio is a term used to describe the proportional relationship between the width and height of an image or a screen. It is typically expressed as two numbers separated by a colon, such as 16:9 or 4:3. The first number represents the width and the second number represents the height.

The most common aspect ratios for surgical monitors are 16:9 and 4:3:

- *16:9 aspect ratio:* This widescreen aspect ratio is prevalent in modern surgical monitors. It provides a wider viewing area, which is beneficial for displaying HD or UHD content during surgeries. The 16:9 aspect ratio allows for clear visualization of surgical images and videos with enhanced detail.
- *4:3 aspect ratio*: While less common in modern surgical monitors, the 4:3 aspect ratio was more prevalent in older monitor models. Some legacy systems or medical equipment might still use monitors with this aspect ratio.

Color Model

A color model is a system used to represent colors in a visual display. It defines how colors are encoded and displayed on the screen.

One of the most commonly used color models in surgical monitors and medical imaging is the RGB (red, green, and blue) color model. In this model, colors are created by combining varying intensities of red, green, and blue light.

The RGB color model allows for the display of a wide range of colors, providing surgeons and medical professionals with a detailed and realistic view of medical images and videos. High-quality surgical monitors often use a wide-gamut RGB color space, which can accurately reproduce a broad spectrum of colors found in medical imaging.

Color Depth

Color depth, also known as bit depth, refers to the number of bits used to represent each pixel on the screen. It determines the number of colors that can be displayed. Common color depths for surgical monitors include 8-bit, 10-bit, and 12-bit. The higher the bit depth, the more colors can be accurately represented.

Higher color depth allows for smoother color gradients and reduces the likelihood of color banding, which is essential when displaying medical images with subtle color variations or gradients. Monitors with higher color depth are preferred in medical settings to ensure accurate and precise visualization during surgical procedures.

Accurate color representation and depth are crucial in surgical monitors because they directly impact the ability of surgeons to make critical decisions based on visual information. Medical-grade monitors with advanced color

JAYPEE BROTHERS

calibration and a wide color gamut are used to ensure the highest level of accuracy in displaying medical images and videos during surgical interventions and diagnostic procedures.

Interlaced and Progressive Displays

Interlaced: Interlaced is an older method of displaying images on screens. It was more commonly used in older cathode ray tube (CRT) monitors and televisions. In interlaced displays, each frame of the image is divided into two fields, referred to as odd and even lines. The odd lines are displayed first, and then the even lines are displayed in the next refresh cycle.

The advantage of interlaced displays was that they could provide a perception of motion with a lower bandwidth requirement because only half of the image lines were updated at a time. However, interlaced displays could sometimes lead to a flickering effect and reduced image clarity, especially with fast-moving content.

Progressive: Progressive is the more modern and standard method of displaying images on screens. It is commonly used in modern monitors, HDTVs, and other display devices. In progressive displays, each frame of the image is displayed sequentially, line by line, without splitting into fields. The entire image is updated in each refresh cycle.

Progressive displays provide smoother motion, improved image clarity, and reduced flickering compared to interlaced displays. The majority of digital content, including HD video and computer graphics, is designed for progressive displays.

Video Connectors

Different types of video connectors are shown in **Table 1**.

Recording, Editing, and Storage

In the realm of modern laparoscopic surgery, the ability to record, edit, and store surgical procedures is of paramount importance. The ability to capture and revisit these procedures provides immense value for documentation, medicolegal evidence, surgeon training, surgical innovation, and research.

Recording

The first step in the process is the actual recording of the surgery. This is typically done by the camera control unit (CCU) that is connected to the laparoscope. These CCUs usually have built-in recording functionalities, allowing for both video and still image capture. The recording is typically initiated and controlled by the surgical team or a dedicated recording technician. The resolution, frame rate, and format of the recording can vary based on the capabilities of the CCU and the desired quality of the recorded video.

For good quality, recording and streaming the entire flow should be of the same quality as your telescope and camera.

For example, if the camera is in Full HD format and regular composite video output is being used, you will not get the best result output. So, it is essential to use DVI/HDMI for the monitor and 3G SDI output from the camera to the recording and streaming device for the best possible result. In the same way for a 4K camera, you must use DVI/HDMI for the monitor and 12G SDI output from the camera to the recording and streaming device for the best possible result.

It must be ensured that the recording and streaming device supports full HD/4K capabilities depending on the camera.

Note: For streaming full HD and 4K videos, a high-speed dedicated internet lease line is necessary. For best results, HDMI cables should not be used for more than 5 m. For longer distance, you can convert the DVI/HDMI to 3G SDI for HD and 12G SDI for 4K using the converters. 3G SDI cable can go up to 80 m and 12G SDI cable for 30 m. For longer distances, there are other solutions depending on the specific requirements.

Editing

Following the recording, the raw video footage can be edited to remove unnecessary portions, enhance visual clarity, or annotate with relevant surgical findings and steps. This process can be carried out using various video editing software packages, and the edited video can then be exported in a desired format. It is important to note that the original raw footage should always be preserved in its unedited form for medicolegal purposes.

Storage

There are three main categories of storage devices: (1) Optical, (2) magnetic, and (3) semiconductor. The earliest of these was the magnetic device. Computer systems began with magnetic storage in the form of tapes. These graduated to the hard disk drive and then to a floppy disk. DAS devices include floppy disks, optical discs—compact discs (CDs) and digital video discs (DVDs)—hard disk drives (HDD), flash drives, and solid-state drives (SSD).

JAYPEE BROTHERS

TABLE 1: Different types of video connectors.

Connector	*Video signal*	*Audio signal*	*Maximum resolution*	*3D support*	*Images*
Digital visual interface (DVI) (**Fig. 8**)	Digital	No	1920 × 1200 at 60 Hz	No	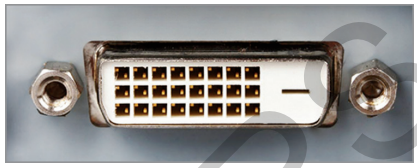 **Fig. 8:** DVI.
Serial digital interface (SDI) (**Fig. 9**)	Digital	Yes	1080p at 60 Hz (SDI), 2160p at 60 Hz (12G-SDI)	No	 **Fig. 9:** SDI.
High-definition multimedia interface (HDMI) **(Fig. 10)**	Digital	Yes	7680 × 4320 at 60 Hz (HDMI 2.1)	Yes	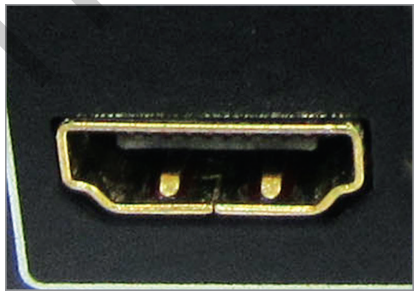 **Fig. 10:** HDMI.
Video graphics array (VGA) **(Fig. 11)**	Analog	No	2048 × 1536 at 85 Hz	No	 **Fig. 11:** VGA.
DisplayPort **(Fig. 12)**	Digital	Yes	7680 × 4320 at 60 Hz (DisplayPort 2.0)	Yes	 **Fig. 12:** DisplayPort.
USB-C (with Display-Port alt mode) **(Fig. 13)**	Digital	Yes	Depends on Display-Port version	Depends on Display-Port version	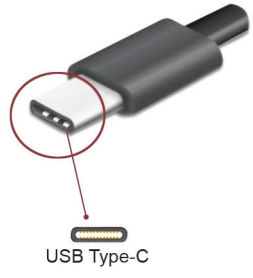 **Fig. 13:** USB-C.

JAYPEE BROTHERS

Network-based storage allows more than one computer to access it through a network, making it better for data sharing and collaboration. Network-attached storage (NAS) is a file-level (as opposed to block-level storage) computer data storage server connected to a computer network providing data access to a heterogeneous group of clients.

The storage of recorded videos has seen a tremendous shift in recent years. With the advent of cloud storage, videos can now be uploaded and stored securely online. This allows for easy access and sharing of videos across various locations and devices and also removes the risk of loss due to physical damage or degradation over time. It also ensures that a large volume of high-resolution videos can be stored without running out of space. However, due consideration must be given to patient confidentiality and data protection when using cloud storage.

ADVANCEMENTS IN ENDOVISION SYSTEMS

Continuous advancements in technology have significantly impacted endovision systems, enhancing their capability and application in laparoscopic surgery. Some of the key advancements in recent years include the development of robotic systems, FI, and enhanced reality systems.

Robotic Systems and Endovision

One of the most significant advancements in laparoscopic surgery is the integration of robotic systems. The da Vinci Surgical System, for example, uses a 3D HD vision system that allows surgeons to view the surgical field with true depth perception and a high degree of magnification. This results in a more precise visualization of the operating field and allows for enhanced precision and control during the surgery.

Fluorescence Imaging

Another significant development in endovision systems is the use of FI. This technology uses a fluorescent dye that is absorbed by the tissues and then emits light when illuminated with a specific wavelength. The camera system captures these signals and transforms them into an image that allows surgeons to visualize specific tissues or structures clearly. This can be particularly useful in identifying critical structures, such as blood vessels, lymph nodes, and tumors during surgery.

Enhanced Reality Systems

Enhanced reality systems represent another emerging field in laparoscopic surgery. These systems overlay preoperative and intraoperative imaging data onto the real-time view of the surgical field, providing surgeons with additional contextual information. This can improve the understanding of complex anatomical structures and assist in surgical navigation.

In conclusion, advancements in endovision technology are expanding the capabilities of laparoscopic surgery and improving surgical outcomes. The continuous evolution of these technologies presents exciting possibilities for the future of minimally invasive surgery.

FUTURE PERSPECTIVES OF ENDOVISION SYSTEMS IN LAPAROSCOPIC SURGERY

As we look to the future, it is clear that endovision systems will continue to evolve, leading to further improvements in laparoscopic surgery. The rapid pace of technological advancements, combined with an increased understanding of surgical techniques and processes, promises exciting developments in the field.

Artificial Intelligence-enhanced Endovision Systems

The application of artificial intelligence (AI) in healthcare is burgeoning, and its integration into endovision systems will likely transform laparoscopic surgery. AI algorithms can enhance surgical imaging, automate routine tasks, and even aid in surgical decision-making. For instance, AI could provide real-time recognition of anatomical structures and abnormal tissues, thus improving surgical accuracy and patient safety.

Augmented Reality and Virtual Reality in Surgery

Augmented reality (AR) and virtual reality (VR) technologies are finding their way into the surgical realm. They promise to merge real-time imaging with preoperative and intraoperative data to provide a comprehensive visualization of the surgical field. This can facilitate better surgical planning and real-time navigation during surgery.

Miniaturization of Endovision Systems

The miniaturization of endovision systems will be a significant leap forward, allowing for even less invasive procedures. Innovations like microendoscopes and "pill cameras" can provide detailed imaging while causing minimal discomfort to the patient. This can also extend the reach of endoscopic procedures to previously inaccessible regions of the body.

JAYPEE BROTHERS

Enhanced Training Tools

With the growing complexity of endovision systems, there will be an increased focus on creating effective training tools. This could involve the use of VR or AR for simulation training, enhancing the proficiency of surgeons in handling these advanced systems.

CONCLUSION

In conclusion, while there are already impressive advances in endovision systems, the future promises even more significant leaps forward. As technology continues to evolve, so too will the capabilities and applications of endovision systems in laparoscopic surgery.

SUGGESTED READING

1. Bernhardt S, Nicolau SA, Soler L, Doignon C. The status of augmented reality in laparoscopic surgery as of 2016. Med Image Anal. 2017;37:66-90.
2. Gurusamy KS, Samraj K. Abdominal insufflation for laparoscopic cholecystectomy. Cochrane Database Syst Rev. 2008;2:CD006204.
3. Hanna GB, Shimi SM, Cuschieri A. Task performance in endoscopic surgery is influenced by location of the image display. Ann Surg. 1998;227(4), 481.
4. Hashimoto DA, Rosman G, Rus D, Meireles OR. Artificial intelligence in surgery: Promises and perils. Ann Surg. 2018;268(1):70-6.
5. Nezhat C, Main J, Paka C, Nezhat A, Beygui RE. Advanced gynecologic laparoscopy in a fast-track ambulatory surgery center. JSLS.2014;18(1):1-5.
6. Sakata S, Grove PM, Hill A, Watson MO, Stevenson AR. Impact of simulated three-dimensional perception on precision of depth estimation in vitro. Surg Endosc. 2017;31(1): 436-43.
7. Seagull FJ, Cao CGL. Situation awareness, confidence, and performance with a robotic surgical system. Appl Ergon. 2008;39(4):503-9.
8. Semm K. Endoscopic intraabdominal surgery. Endoscopy. 1983; 15(02): 59-64.
9. Soper NJ, Stockmann PT. Laparoscopic cholecystectomy. The state of the art. Surg Clin N Am. 1992;72(5):1007-22.
10. Stefanidis D, Hope WW, Korndorffer JR, Markley S, Scott DJ. Initial laparoscopic basic skills training shortens the learning curve of laparoscopic suturing and is cost-effective. J Am Coll Surg. 2010;210(4):436-40
11. van Manen L, Handgraaf HJ, Diana M, Dijkstra J, Ishizawa T, Vahrmeijer AL, et al. A practical guide for the use of indocyanine green and methylene blue in fluorescence-guided abdominal surgery. J Surg Oncol. 2018;118(2): 283-300.
12. Yan TD, Black D, Bannon PG, McCaughan BC. Systematic review and meta-analysis of randomized and non-randomized trials on safety and efficacy of video-assisted thoracic surgery lobectomy for early-stage non–small-cell lung cancer. J Clin Oncol. 2006;24(15):2553-62.

JAYPEE BROTHERS

for detailed information on surgery books, visit our website www.jaypeebrothers.com, for detailed information on surgery books, visit our website www.jaypeeb

Textbook of Laparoscopic, Endoscopic and Robotic Surgery

Laparoscopic and robotic surgery are minimal access surgery to gain access to the peritoneal/thoracic cavities through small diameter ports. It avoids morbidity and sequelae associated with large incisions with equally good outcome, fast recovery and early return to work.

Endoscopic surgery performed by intervention gastroenterologist and also to certain extent by surgeons through intraluminal or transluminal approach is expanding and even replacing laparoscopic and robotic surgery in many surgically treatable diseases of gastrointestinal tract. Endoscopic surgery wherever applicable is more patient friendly, less invasive with fast recovery and better follow–up.

All these three modalities of minimal access surgery are discussed in detail in this *Textbook of Laparoscopic, Endoscopic and Robotic Surgery* in all the gastrointestinal surgical diseases, which makes this book unique. Surgeons after making comparative assessment about the merit and demerit of all these three modalities for the specific disease may select the best suitable modality for the treatment of their patients.

The book has six sections. Section (I) Essentials in laparoscopic, endoscopic and robotic surgery. Section (II) Surgery of the esophagus, stomach, and small intestine. Section (III) Surgery of colon, rectum, and anal canal. Section (IV) Surgery of the liver, biliary tract, pancreas, and spleen. Section (V) Bariatric and metabolic surgery. Section (VI) Surgery of the abdominal wall hernia. The book is in two volumes having 135 chapters. Each chapter has been discussed in detail with relevant figures, tables, etc. Video of surgical procedures are included with the book.

All the editors and authors are nationally and internationally recognized authorities in their specific field of surgery. Several chapters have been authored by international faculty.



Har Prakash Garg MS
Senior Consultant
Department of Gastrointestinal and Minimal Access Surgery
Indraprastha Apollo Hospitals, New Delhi, India
Founder of Fellowship courses in
Advanced Laparoscopic Surgery (FALS) in
India including its conceptualization and execution

Ramesh Agarwalla MS FRCS
Director, Department of Gastrointestinal and Minimal Access Surgery
Fortis Hospital, Kolkata, West Bengal, India
Past President, Hernia Society of India
Past President, Indian Association of Gastrointestinal Endosurgeons





Makam Ramesh DNB FAIS FAICS FIMS
Director, AV Hospital and Arka Anugraha Hospital, Bengaluru, Karnataka, India
Chairman, Bangalore Endoscopic Surgery Training Institute and Research Centre, Bengaluru
Pioneered Laparoscopic Surgery in Karnataka
Developed Virtual Reality Simulator
Vice President, IAGES, AMASI, HSI

Ajay Kumar MD DM (Gastroenterology)
Chairman, Department of Gastroenterology, Hepatology, and Endoscopy, BLK-Max Super Speciality Hospital, New Delhi, India
Recipient of Dr BC Roy Award (2008)
Past President for Society of GI Endoscopy of India
Past President, Indian Society of Gastroenterology





Kona Lakshmi MS FICS
Consultant Surgical Gastroenterologist, Minimal Access Gastroenterology, Metabolic and Bariatric Surgeon
Yashoda Hospital, Hyderabad, Telangana, India
Past Vice President of IAGES
Organizing Secretary, Hernia Society of India Conferences (HSICON), 2023

Printed in India

Available at all medical bookstores or buy online at www.jaypeebrothers.com

JAYPEE BROTHERS
Medical Publishers (P) Ltd.
EMCA House, 23/23-B, Ansari Road,
Daryaganj, New Delhi - 110 002, INDIA
www.jaypeebrothers.com

Join us on facebook.com/JaypeeMedicalPublishers

Shelving Recommendation
SURGERY

ISBN 978-93-5696-562-1